Miscellaneous Standard Drawings

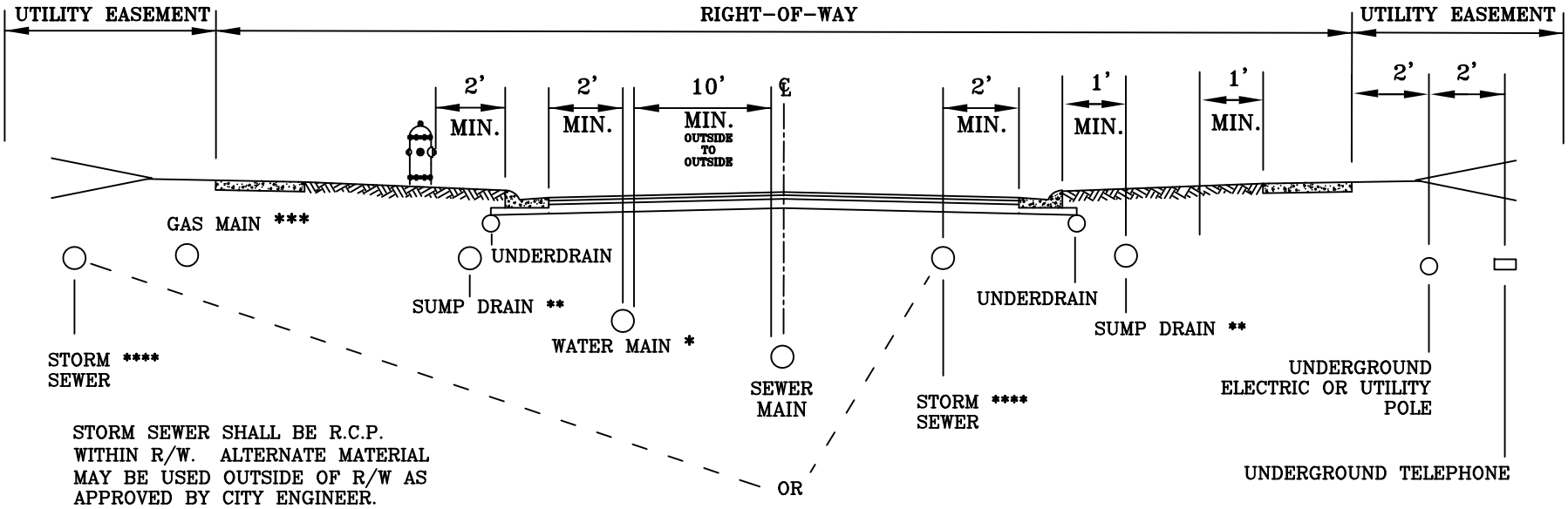

STORM SEWER SHALL BE R.C.P. WITHIN R/W. ALTERNATE MATERIAL MAY BE USED OUTSIDE OF R/W AS APPROVED BY CITY ENGINEER.

UTILITY	MINIMUM COVER
STORM DRAIN & CROSS DRAIN	2'-0" OUTSIDE R/W 3'-0" INSIDE R/W
GAS MAIN	2'-0"
UNDERGROUND ELECTRIC & TELEPHONE CONDUITS	2'-6"
WATER MAIN	4'-0"
SEWER MAIN	5'-0"
SUMP DRAIN	2'-0"

* CAN BE LOCATED ON EITHER SIDE OF STREET AND MAINTAINED ON THE SELECTED SIDE FOR THE ENTIRE DEVELOPMENT IF POSSIBLE.

** SUMP DRAIN TO BE USED FOR DOWN SPOUT, SUMP PUMP, & FOOTER DRAIN TIE-INS. 8" MINIMUM IF DOWNSPOUT LINES ARE TO BE TIED IN; 6" MINIMUM IF NO DOWNSPOUT LINES ARE TO BE TIED IN

*** GAS MAIN CAN BE LOCATED ON EITHER SIDE OF STREET

**** PREFERRED LOCATION FOR STORM SEWER IS IN STREET. STORM SEWER CAN BE PLACED IN UTILITY EASEMENT IF NECESSARY.

UTILITY LOCATIONS - SECTION

CITY OF LEBANON DEPARTMENT OF ENGINEERING

CITY OF LEBANON 1802

DATE 7/25/2006

APPROVED BY:

STANDARD DRAWING

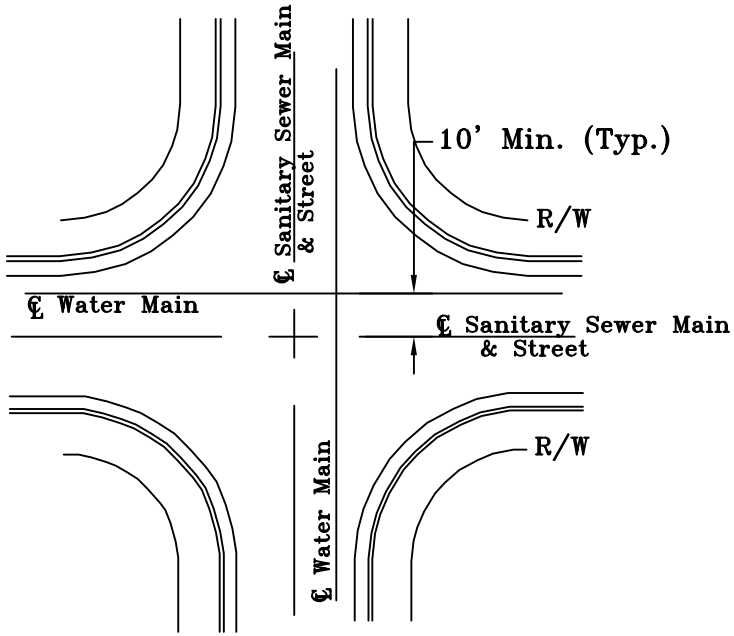

GRID STREETS

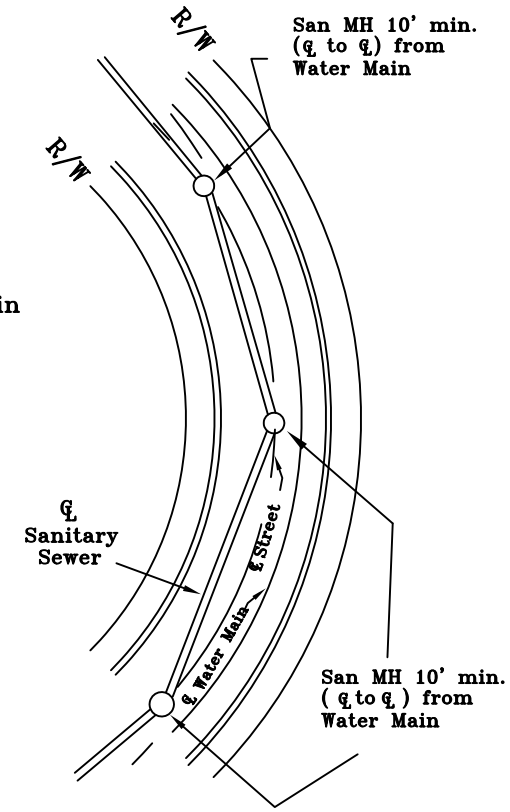

CURVILINEAR STREETS

(When sanitary main can not be kept within pavement, a manhole shall be placed at curve center.)

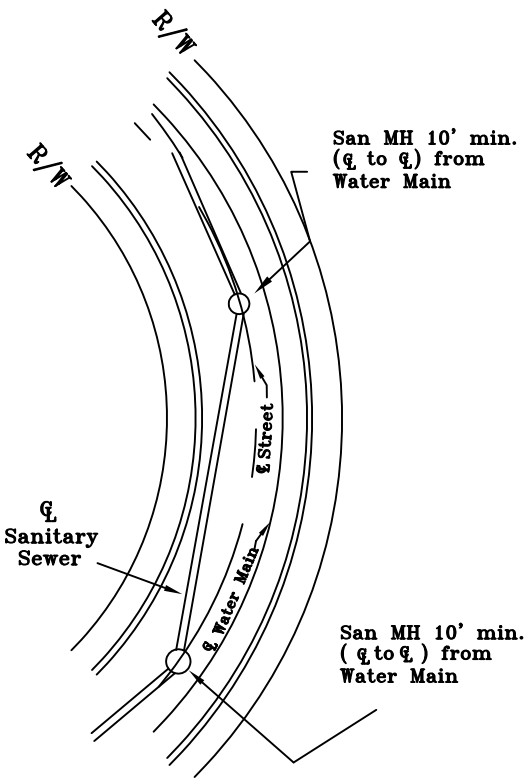

CURVILINEAR STREETS

(Keeping sanitary main within pavement)

Water mains shall be generally placed a minimum of 2' from face of curb. Sanitary sewer lines shall generally be placed to follow the centerline of the street.

Where it is necessary to cross the water line, the crossing shall be in accordance with the requirements of the City of Lebanon and the Ohio EPA.

In order to reduce the number of manholes in curvilinear streets, manholes must be located within the centerline of the street before and after the curve, with the sanitary main located within the pavement area between the two manholes.

Where the sanitary main can not be located within the pavement area of a curvilinear street, a manhole shall be placed in the centerline of the street at the curve center to eliminate the sanitary sewer from being placed under sidewalks and driveways.

UTILITY LOCATIONS - PLAN VIEW		
CITY OF LEBANON DEPARTMENT OF ENGINEERING	CITY OF LEBANON 1802	DATE 7/25/2006
APPROVED BY:	STANDARD DRAWING	

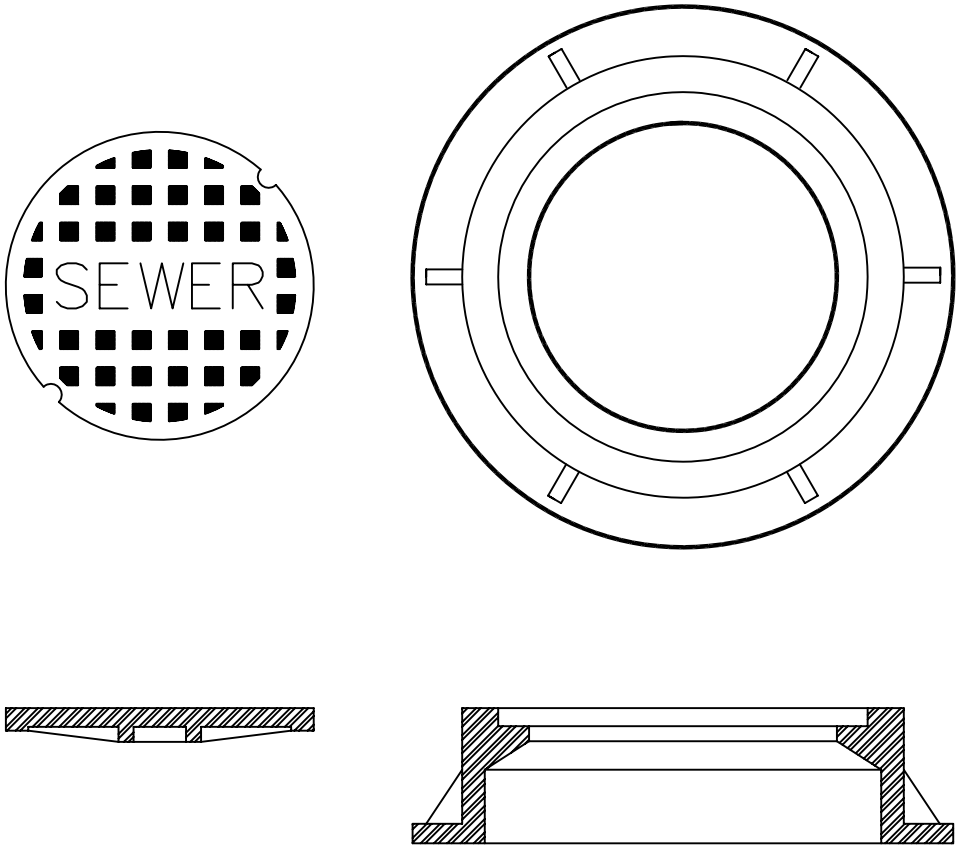

NOTES:

1. Neenah R-1642 or EJIW 1040 manhole cover and frame shall be used where bolt-down lids are not required.
2. Neenah R-1916-F or EJIW 1045 manhole cover and frame shall be used where bolt-down lids are required.
3. Sanitary manhole cover shall have "SANITARY SEWER" lettered on upon it.
4. Storm manhole cover shall have "STORM SEWER" lettered on upon it.
5. Water Vault cover shall have "WATER" lettered on upon it.
6. Lids shall be vented or solid as directed by the City Engineer.

STANDARD MANHOLE FRAME & COVER DETAIL		
CITY OF LEBANON DEPARTMENT OF ENGINEERING	CITY OF LEBANON 1802	DATE 7/25/2006 2/07/2008
APPROVED BY	STANDARD DRAWING	

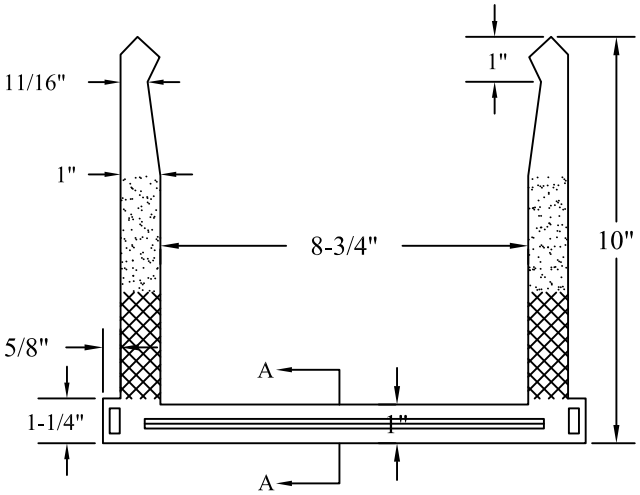

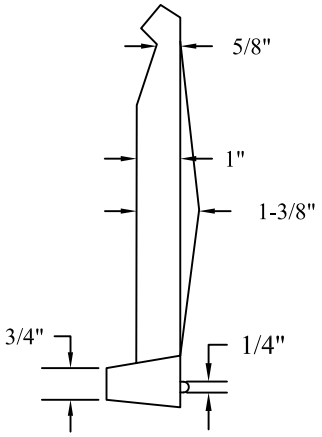

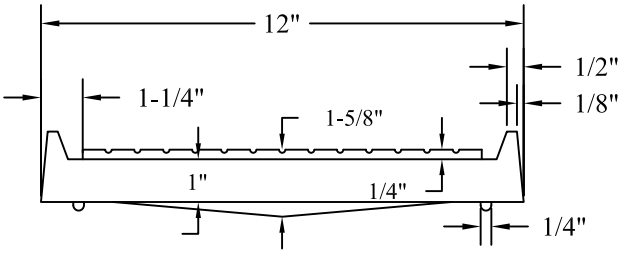

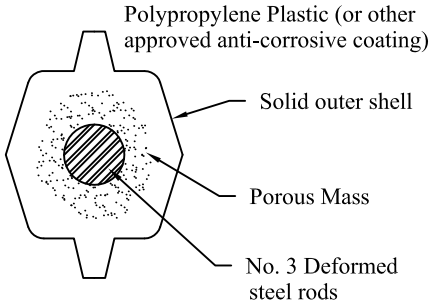

SECTION A-A

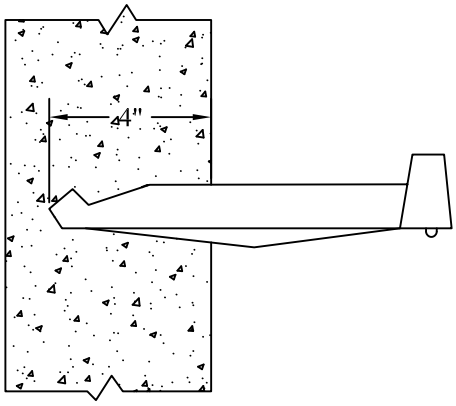

MATERIALS:
Polypropylene plastic - grade 10-1014 "Avison Corp."

Steel reinforcing bar - conforms to A.S.T.M. standard A-615

INSTALLATION
Steps are to be poured integrally with the manhole section and NOT mortared or grouted in later

STANDARD MANHOLE STEP		
CITY OF LEBANON DEPARTMENT OF ENGINEERING	CITY OF LEBANON 1802	DATE 7/25/2006
APPROVED BY	STANDARD DRAWING	

TRENCH RUNNING PARALLEL TO PAVEMENT

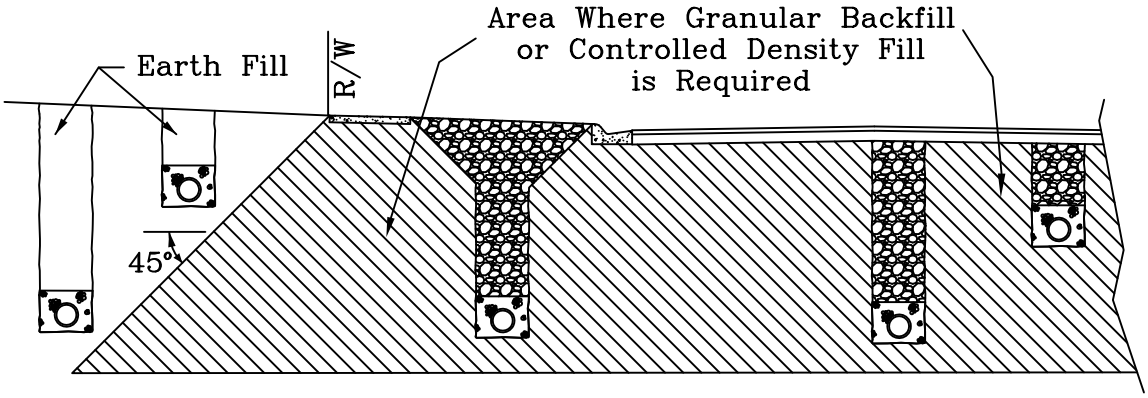

TRENCH CROSSING PAVEMENT

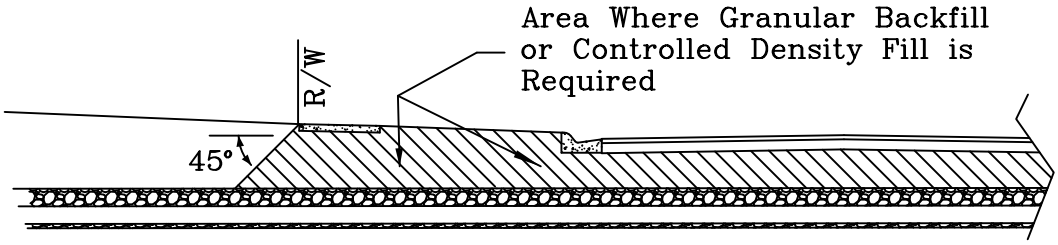

NOTES :

1. This standard applies to all utility trenches.
2. Granular backfill shall be ODOT Item 304 crushed limestone or ODOT Item 411 crushed limestone.
3. Granular backfill shall be compacted in 6" layers with a mechanical tamper.
4. These are examples only, to show extent of backfill in the vicinity of pavement.
5. Granular backfill or controlled density fill shall be required for all trenches within Public Rights-of-Way and under all pavement, driveways or sidewalks outside of Public Rights-of-Way.
6. All turf areas in Rights-of-Way shall receive a top layer of 6" shredded top soil on top of backfill.

GRANULAR BACKFILL DETAIL		
CITY OF LEBANON DEPARTMENT OF ENGINEERING	CITY OF LEBANON 1802	DATE 7/25/2006 1/25/2012
APPROVED BY:	STANDARD DRAWING	

THE I.D. OF THE STEEL CASING PIPE SHALL BE AT LEAST 6 INCHES LARGER THAN THE LARGEST OUTSIDE DIAMETER OF ANY JOINT APPENDAGE (INCLUDING RESTRAINED MECHANICAL JOINTS FOR DUCTILE IRON PIPE.

UNLESS OTHERWISE SPECIFIED OR SHOWN ON THE DRAWINGS, WALL THICKNESS SHALL COMPLY WITH THE CHART SHOWN ON THIS PAGE.

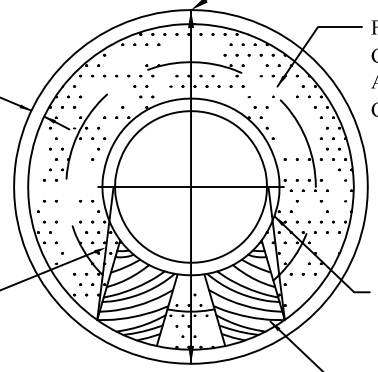

FILL CASING PIPE WITH GROUT, PEA GRAVEL OR APPROVED EQUAL BY CITY ENGINEER

STAINLESS STEEL CASING SPACERS BANDED TO PIPE

CARRIER PIPE

BLOCKING OR SPACERS

REQUIRED CASING PIPE SIZES AND WALL THICKNESSES FOR RAILROAD & HIGHWAY CROSSINGS *

NOMINAL SIZE	ACTUAL O.D.	RAILROAD CROSSINGS BARE	HIGHWAY* CROSSINGS BARE
8"	8 5/8"	.250	.250
10"	10 3/4"	.250	.250
12"	12 3/4"	.250	.250
14"	14"	.281	.250
16"	16"	.281	.250
18"	18"	.321	.250
20"	20"	.344	.312
24"	24"	.406	.312
30"	30"	.469	.406
36"	36"	.532	.500
42"	42"	.625	.562
48"	48"	.688	.625
54"	54"	.781	.719
60"	60"	.844	.625
66"	66"	.938	.625
72"	72"	1.00	.750

NOTE:
* BASED ON HS20 HIGHWAY LOADINGS WITH A MINIMUM COVER AT 4'6".

STEEL CASING PIPE SHALL HAVE A STEEL YIELD STRENGTH OF 35,000 PSI, MEET ATSM A139 GRADE B REQUIREMENTS

NO HYDROTEST IS REQUIRED

TO BE AN EQUAL DISTANCE OR AT LEAST 3" OFF THE BOTTOM OF CASING PIPE.

RESTRAINED MECHANICAL JOINT PIPE (SHOWN AS EXAMPLE ONLY)

FILL CASING PIPE WITH PEA GRAVEL OR APPROVED EQUAL WHEN REQUIRED BY CITY ENGINEER

STAINLESS STEEL CASING SPACERS, CASCADE WATERWORKS MFG., OR APPROVED EQUAL BY CITY ENGINEER

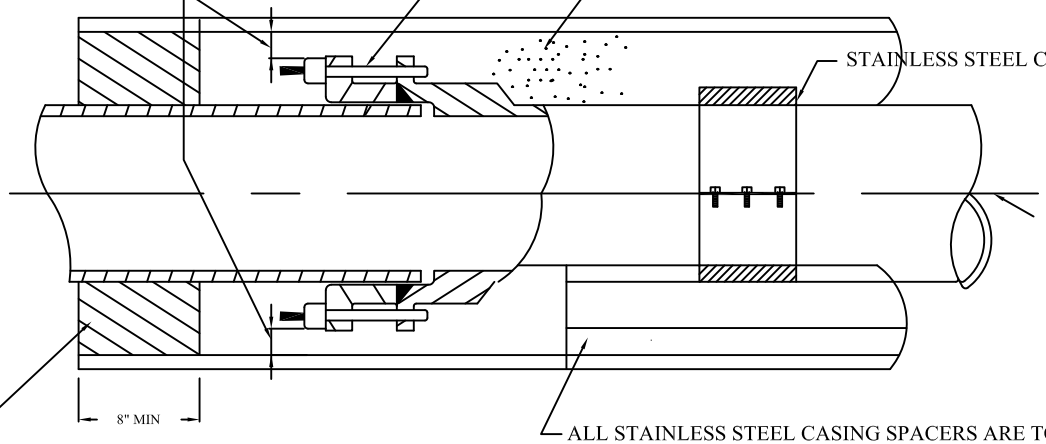

℄ CARRIER PIPE

CONCRETE MASONRY BULKHEAD @ EACH END PROVIDE GROUT HOLES AS REQUIRED

ALL STAINLESS STEEL CASING SPACERS ARE TO BE USED TO SUPPORT THE PIPE WITHIN THE CASING PIPE MAXIMUM SPACING OF BLOCKING IS 8'-0" CENTER TO CENTER ALONG PIPE.

CASING PIPE

CITY OF LEBANON DEPARTMENT OF ENGINEERING

CITY OF LEBANON 1802

DATE 7/25/2006

APPROVED BY:

STANDARD DRAWING

Roadway Standard Drawings

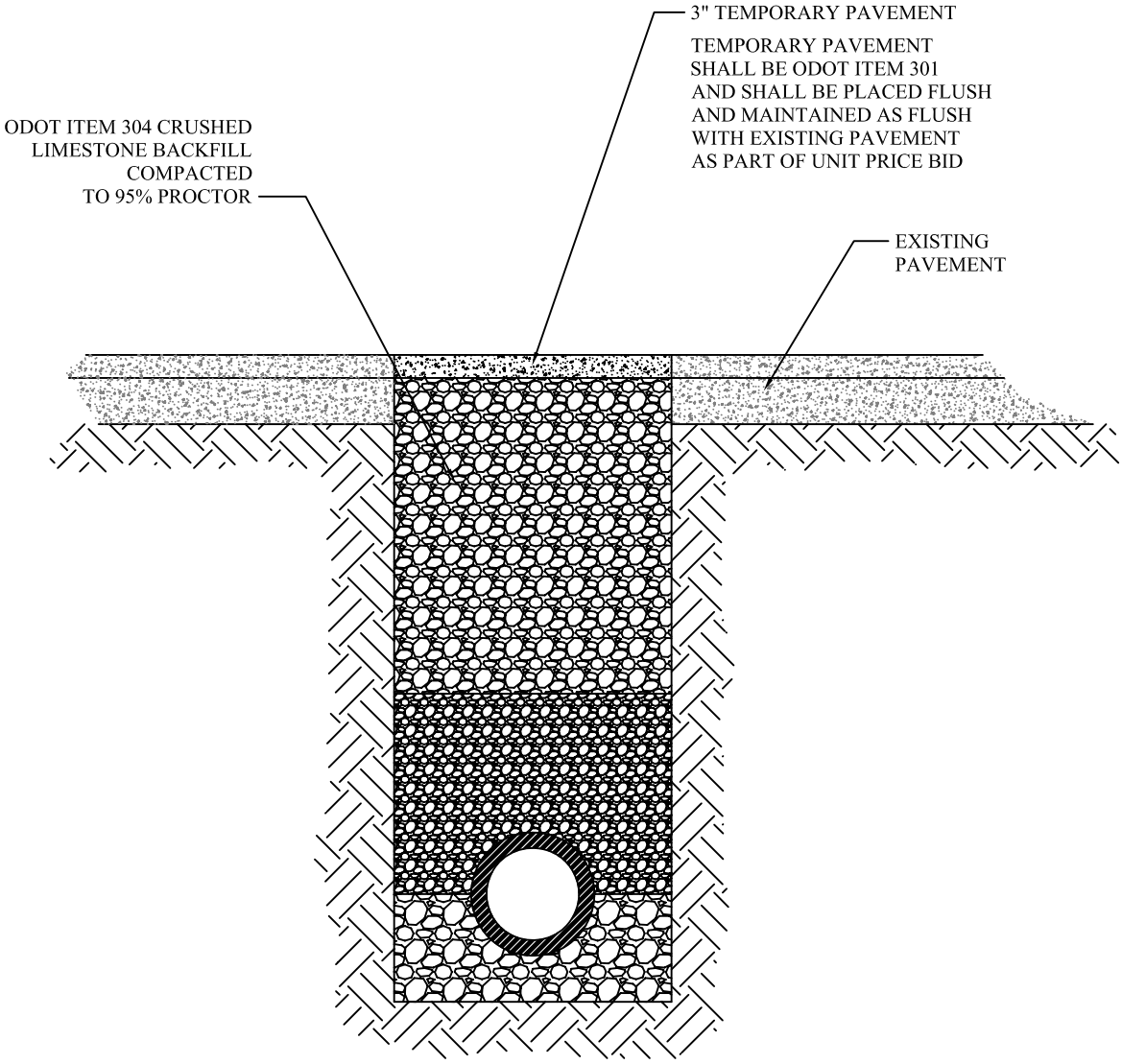

TEMPORARY PAVEMENT STANDARD DRAWING		
CITY OF LEBANON DEPARTMENT OF ENGINEERING	CITY OF LEBANON 1802	DATE 7/25/2006
APPROVED BY:	STANDARD DRAWING	

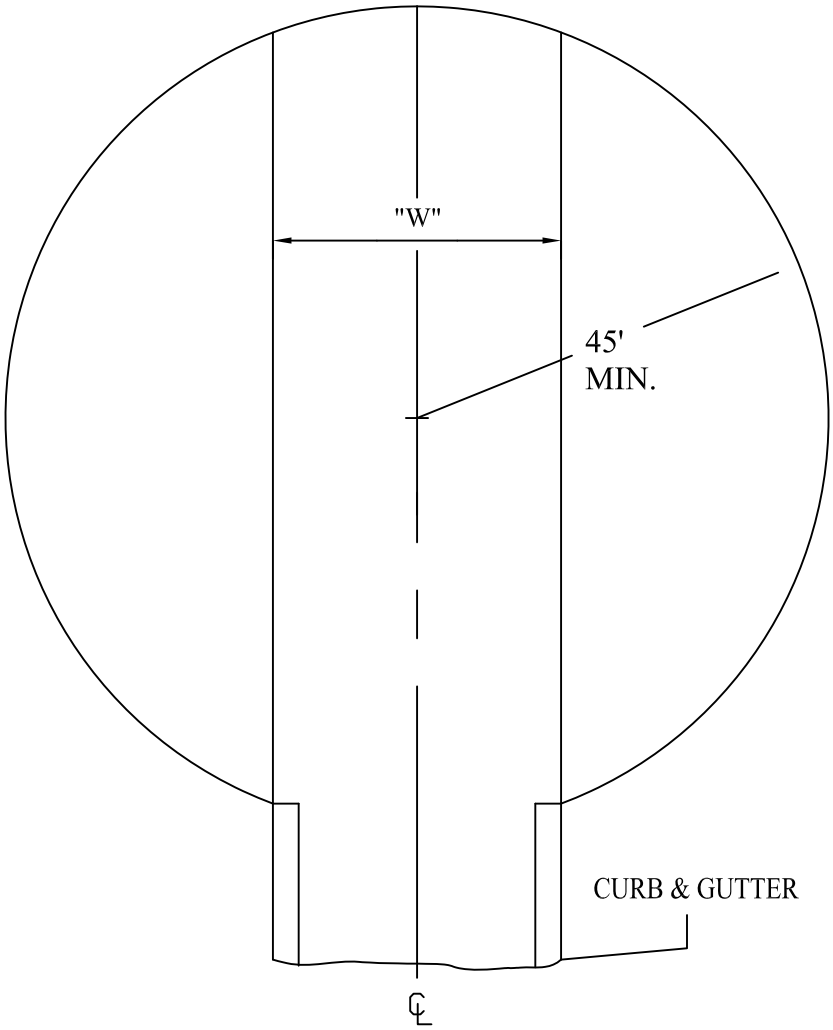

STANDARD PAVEMENT

ASPHALT: RESIDENTIAL - 10" 304, 3" 448 Intermediate Asphalt Concrete, PG64-22, Type 2
INDUSTRIAL - 12" 304, 4" 448 Intermediate Asphalt Concrete, PG64-22, Type 2

TEMPORARY TURNAROUNDS SHALL BE USED WHEN THE STREET BEING CONSTRUCTED WILL BE PROVIDED WITH A TEMPORARY DEAD END THAT IS GREATER THAN ONE LOT IN DEPTH. REFER TO THE CITY OF LEBANON LAND DEVELOPMENT DESIGN AND CONSTRUCTION STANDARDS MANUAL. LARGER TURNAROUND MAY BE REQUIRED BASED ON THE SITUATION.

TEMPORARY TURNAROUND		
CITY OF LEBANON DEPARTMENT OF ENGINEERING	CITY OF LEBANON 1802	DATE 7/25/2006 1/25/2012
APPROVED BY:	STANDARD DRAWING	

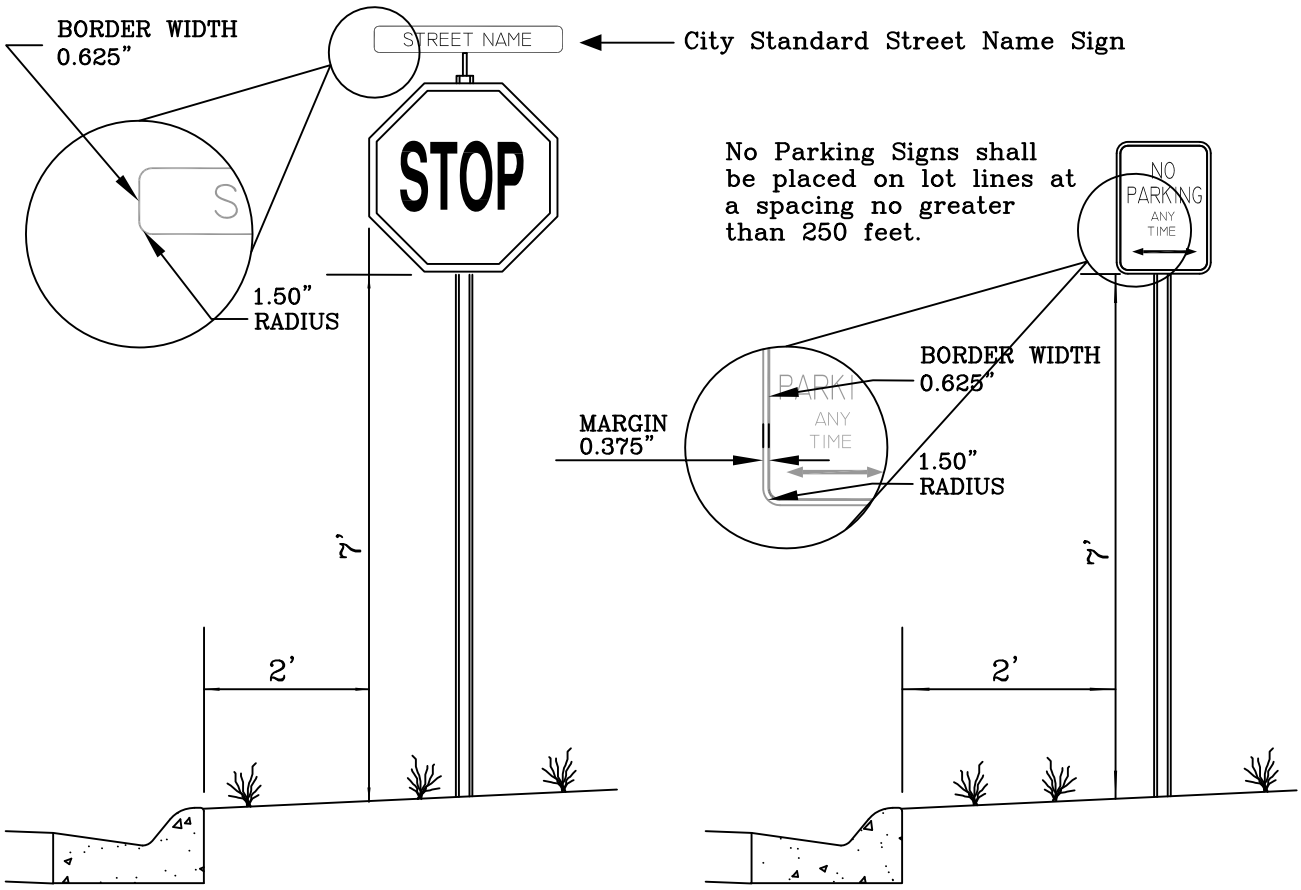

NOTES:

1. All signs shall be diamond reflective sheeting--ODOT standard.
2. Stop signs shall be 30" x 30"
3. Street name signs shall be a minimum of 6" x 12" for local roads and a minimum of 8" x 18" for all other roads. Street name signs shall be diamond reflective with white letters and border on a green background.
4. "NO PARKING" signs shall be situated at a 45° angle to the flow of traffic. The signs shall be 12" x 18". The text and border shall be red.
5. All other signs shall be situated perpendicular to the flow of traffic.
6. All signs shall be mounted on No. 2 (2 lb. per ft.) U-channel post painted green.
7. Aluminum shall be 080 gauge State Spec # 5052-H28.
8. Speed control signage shall conform with the Manual of Uniform Traffic Control Devices and shall be placed in accordance with ODOT standards.

STREET SIGNS STANDARD DRAWING		
CITY OF LEBANON DEPARTMENT OF ENGINEERING	CITY OF LEBANON 1802	DATE 7/25/2006 1/30/2012
APPROVED BY:	STANDARD DRAWING	

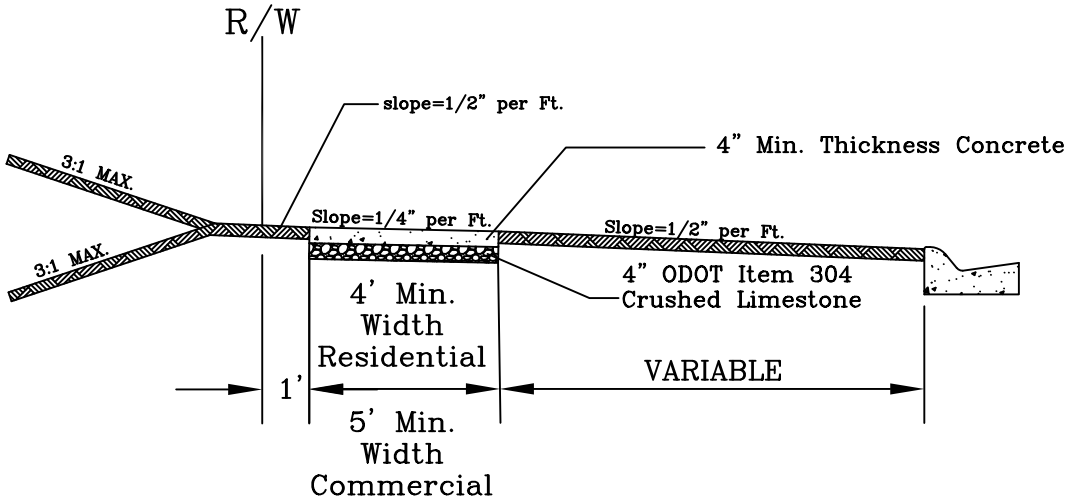

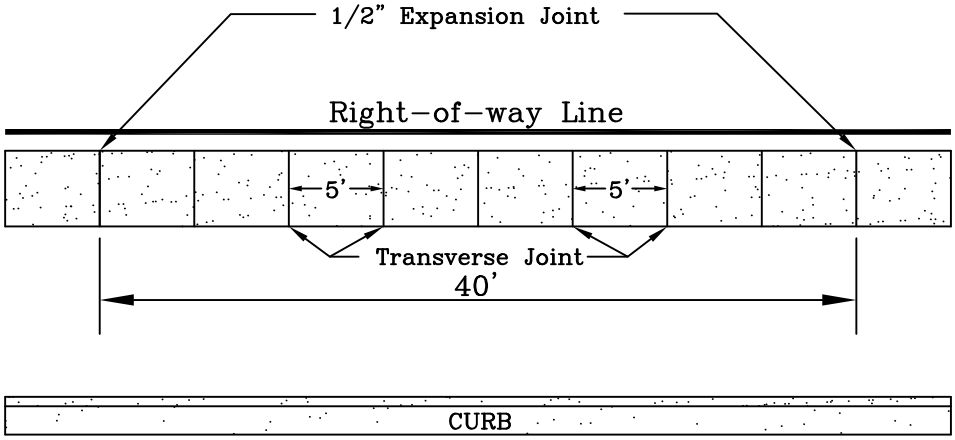

NOTE :

1. Concrete shall be City of Lebanon Standard Concrete.
2. Provide light broom finish or swirl finish to all exposed surfaces.
3. Transverse joints shall be sawed or formed to a depth of not less than one-fourth of the thickness of the slab.
4. Base material shall be 4" of ODOT Item 304 crushed limestone.
5. Expansion joint material shall be recycled rubber or vinyl. Expansion joint material shall match the thickness of the concrete.

SIDEWALK DETAIL

CITY OF LEBANON
DEPARTMENT OF
ENGINEERING

CITY OF LEBANON 1802

DATE
7/25/2006
1/25/2012
11/19/2012

APPROVED BY:

STANDARD
DRAWING

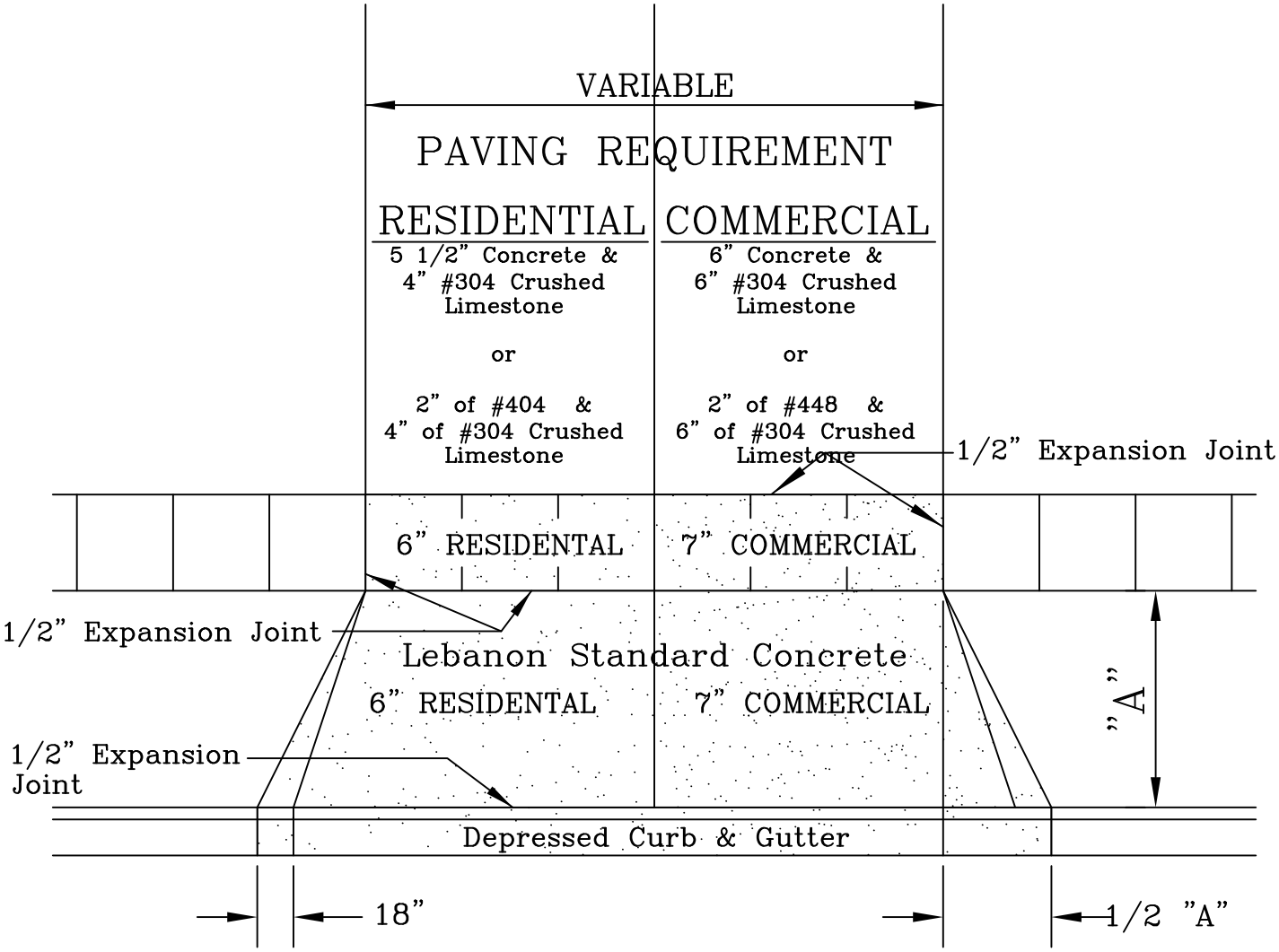

NOTE :

1. In areas with chairback curb, if existing curb is not depressed, it shall be entirely removed and replaced with City Standard depressed curb.
2. If pavement is disturbed, it shall be repaired as directed by the City Engineer.
3. The overall driveway dimension shall be regulated by the City of Lebanon Planning and Zoning Code.
4. The subbase material shall be compacted ODOT Item 304 crushed limestone.
5. All concrete shall be City of Lebanon Standard Concrete.
6. Expansion joint material shall be recycled rubber or vinyl. The expansion joint material shall be the full depth of the concrete.

DRIVEWAY AND APRON DETAIL		
CITY OF LEBANON DEPARTMENT OF ENGINEERING	CITY OF LEBANON 1802	DATE 7/25/2006 1/25/2012 11/19/2012
APPROVED BY:	STANDARD DRAWING	

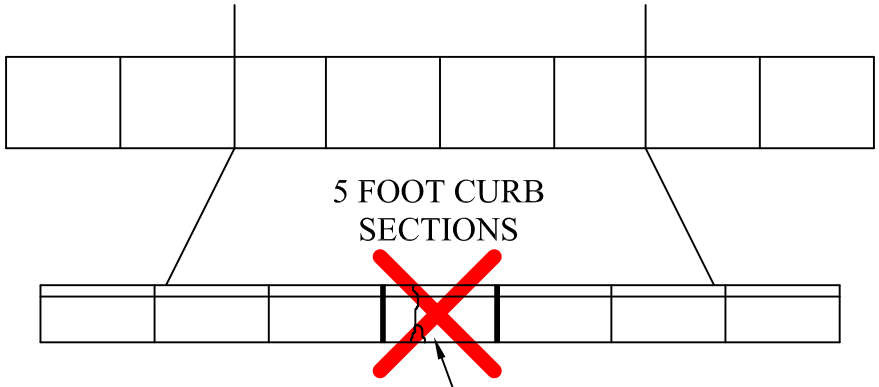

IF THERE ARE ANY CRACKS IN A 5' SECTION, THE ENTIRE SECTION SHALL BE REPLACED. NO PARTIAL SECTION REPAIRS SHALL BE PERMITTED.

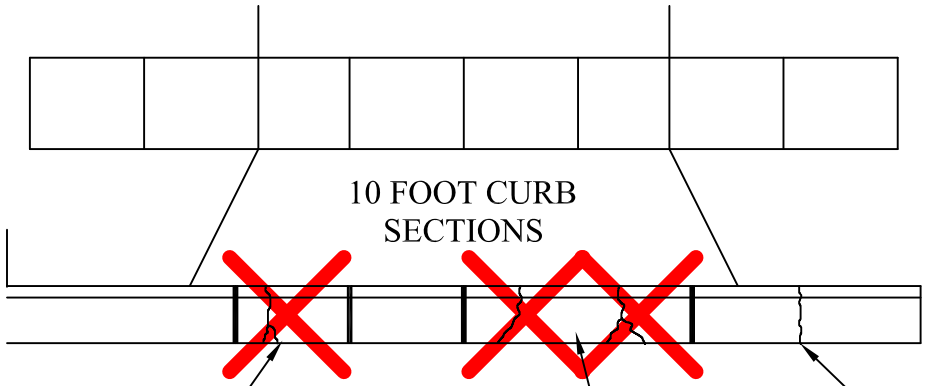

IF THE CRACK IS TOWARD ONE HALF OF A 10' SECTION, ONE HALF OF THE SECTION SHALL BE REMOVED. THE MINIMUM SECTION REMOVED SHALL BE 5'.

IF THE CRACK IS DEAD CENTER, VERTICAL, AND NOT BRANCHING, THE CRACK MAY BE SAW-CUT AND SEALED.

IF THERE ARE MUTIPLE CRACKS THROUGHOUT A 10' SECTION, THE ENTIRE SECTION SHALL BE REPLACED.

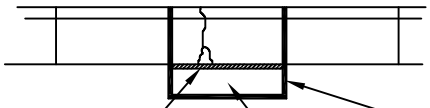

WOOD OR STEEL FORMS EDGE OF PAVEMENT SHALL NOT BE USED AS FORM

TWO FOOT PAVEMENT REMOVAL PAVEMENT SHALL BE REPLACED AFTER CURB HAS CURED

STRAIGHT SAW CUT EDGES FOR CURB AND PAVEMENT REMOVAL

CURB REPAIR PROCEEDURE

CURB REPAIR STANDARD DRAWING

CITY OF LEBANON DEPARTMENT OF ENGINEERING

CITY OF LEBANON 1802

DATE 7/25/2006

APPROVED BY:

STANDARD DRAWING

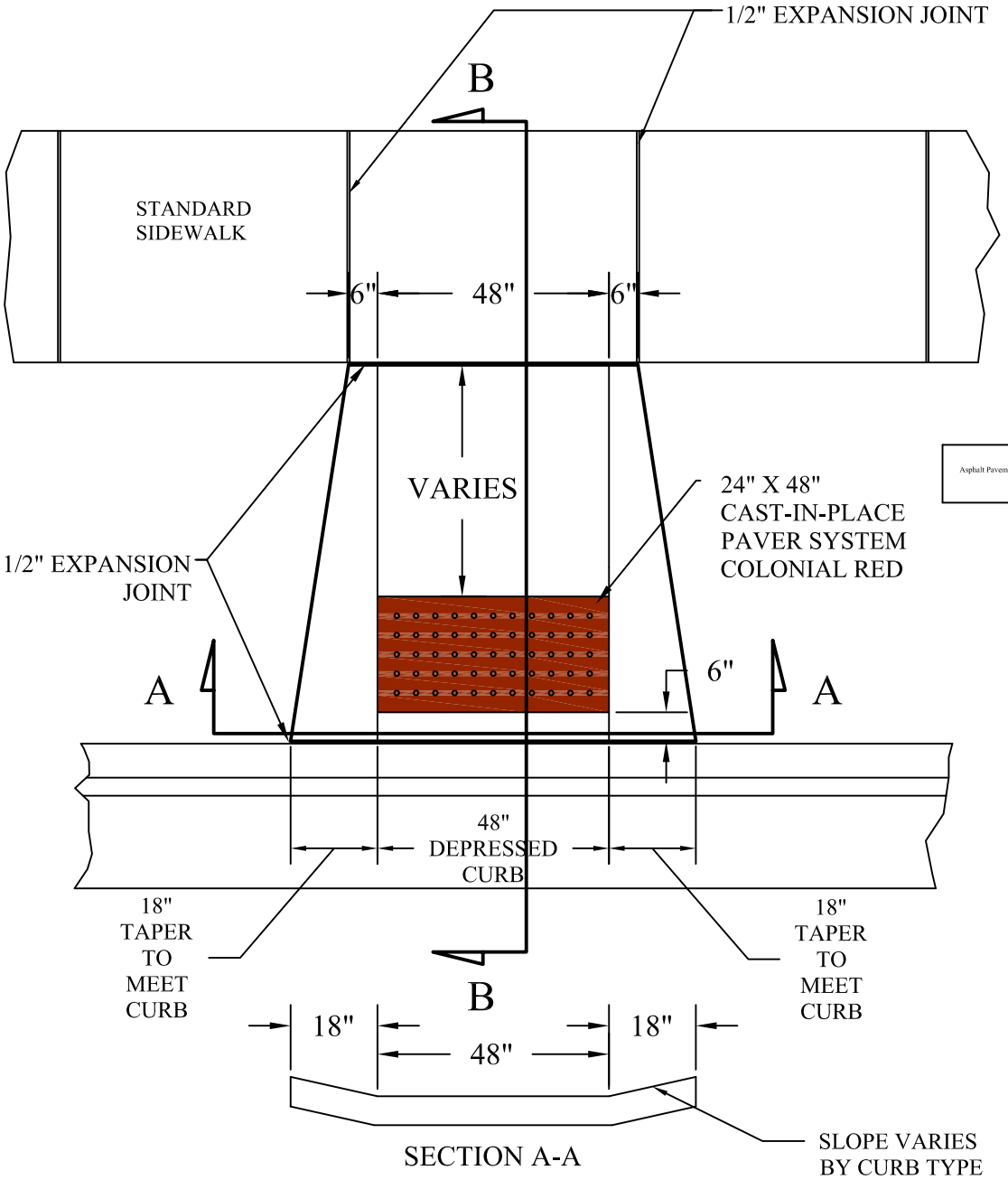

SECTION A-A

NOTE:
ALL CONCRETE SHALL BE CITY OF LEBANON STANDARD CONCRETE

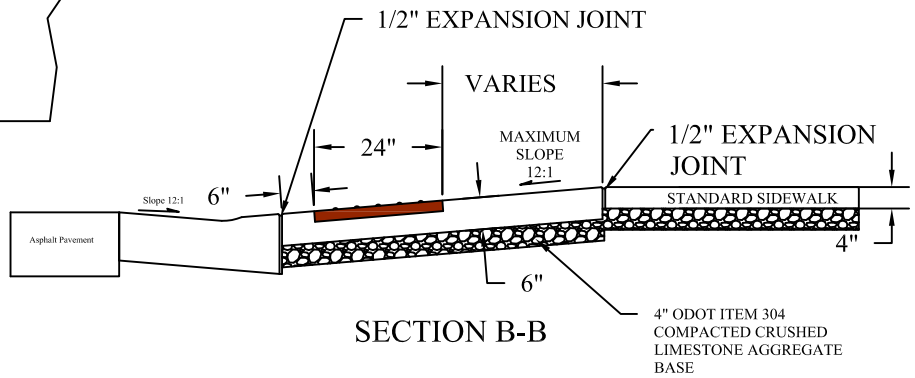

SECTION B-B

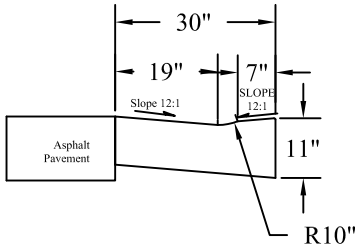

CURB RAMP DEPRESSED CURB

ASPHALT PAVEMET IS SHOWN FOR CLARITY. THICKNESSES SHOWN ARE ARBITRARY. ACTUAL PAVEMENT THICKNESSES SHALL BEBASED UPON A COMPLETE PAVEMENT DESIGN.

CURB RAMP		
CITY OF LEBANON DEPARTMENT OF ENGINEERING	CITY OF LEBANON 1802	DATE 1/31/2007
APPROVED BY	STANDARD DRAWING	

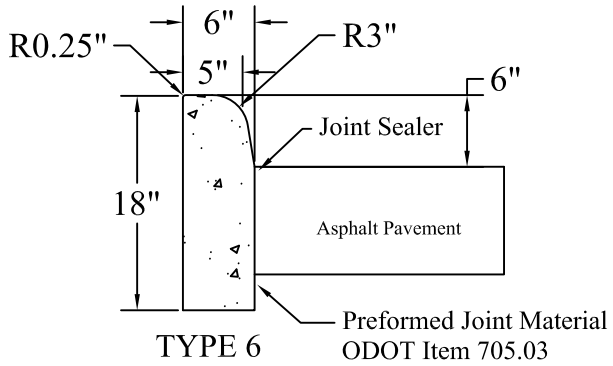

TYPE 6

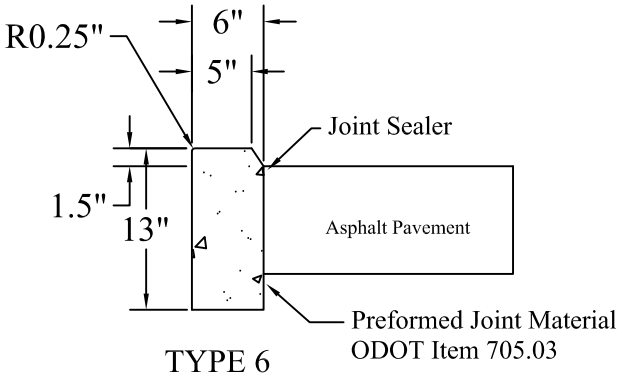

TYPE 6
MODIFIED

NOTES:

- ALL CONCRETE SHALL BE CITY OF LEBANON STANDARD CONCRETE.
- ALL CURB SHALL HAVE A BASE OF 4" OF ODOT ITEM 304 CRUSHED LIMESTONE.
- EXPANSION JOINTS SHALL BE PLACED EVERY 100', AT ALL STRUCTURES, WHEREVER NEW CURB ABUTS EXISTING CURB, AND AT ALL CHANGES IN DIRECTION. ONLY RECYCLED RUBBER OR VINYL EXPANSION JOINT MATERIAL SHALL BE USED.
- CONTROL JOINTS SHALL BE PLACED EVERY FIVE FEET.

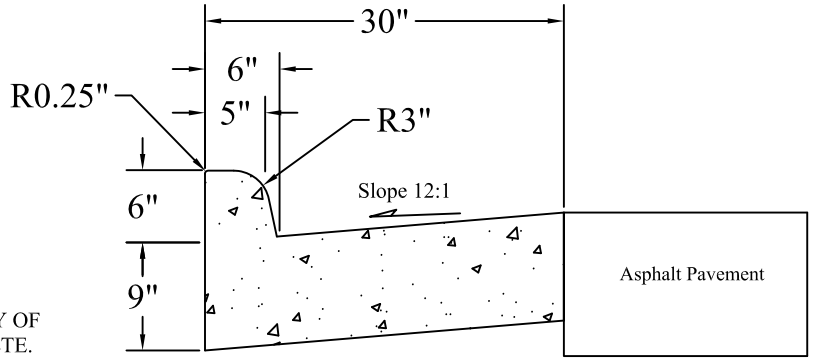

TYPE 2

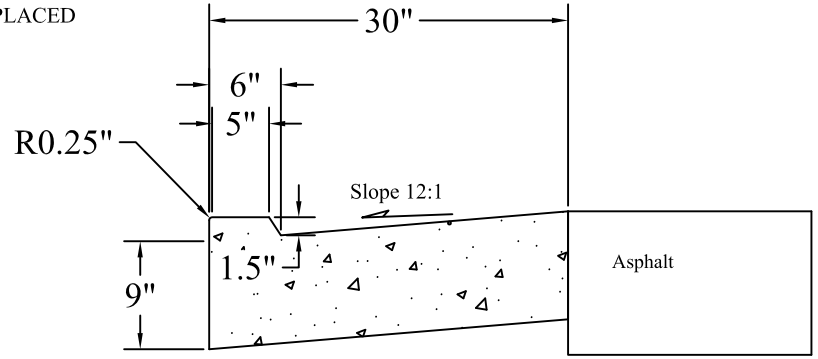

TYPE 2
Modified

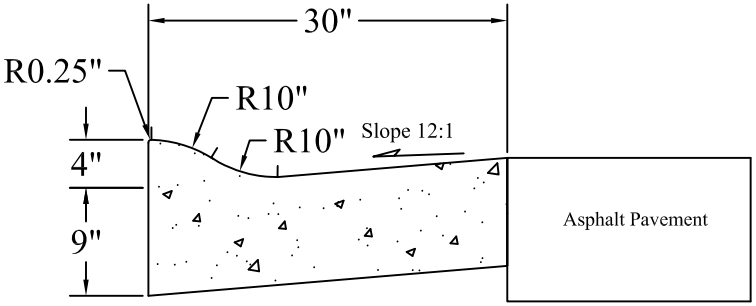

TYPE 3

ASPHALT PAVEMET IS SHOWN FOR CLARITY. THICKNESSES SHOWN ARE ARBITRARY. ACTUAL PAVEMENT THICKNESSES SHALL BEBASED UPON A COMPLETE PAVEMENT DESIGN.

ODOT STANDARD CURB

CITY OF LEBANON
DEPARTMENT OF
ENGINEERING

CITY OF LEBANON 1802

DATE
7/25/2006
4/12/2010
7/13/2012
11/19/2012

APPROVED BY

STANDARD
DRAWING

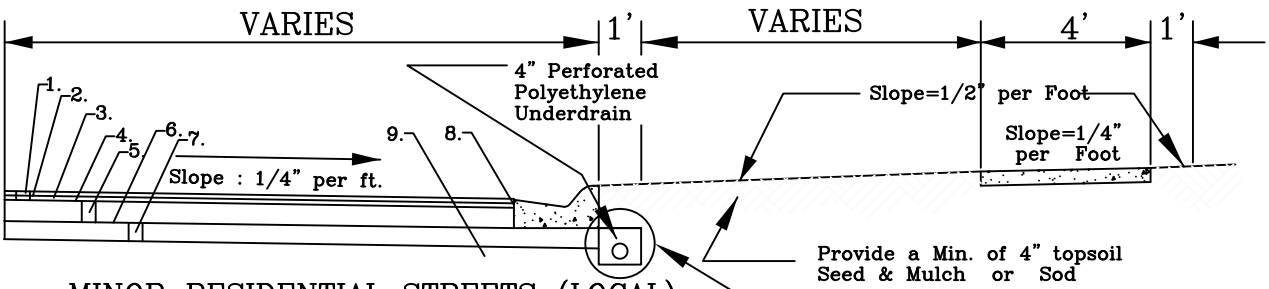

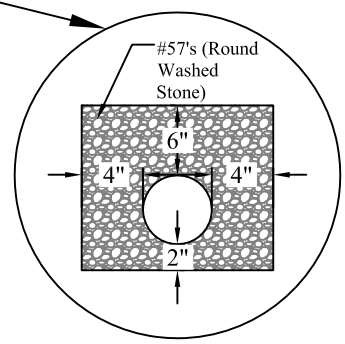

MINOR RESIDENTIAL STREETS (LOCAL)

1. ODOT ITEM 448 – 1.5" Asphalt Concrete Surface Course, Type 1, PG64–22
2. ODOT ITEM 407 – Tack Coat (0.10 gal./sq. yd.)
3. ODOT ITEM 448 – 2" Asphalt Concrete Intermediate Course, Type 2, PG64–22
4. ODOT ITEM 407 – Tack Coat (0.10 gal./sq. yd.)
5. ODOT ITEM 301 – 5" Bituminous Aggregate Base
6. ODOT ITEM 408 – Prime Coat (0.40 gal./sq. yd.)
7. ODOT ITEM 304 – 6" Crushed Limestone Aggregate Base (in 2 lifts)
8. ODOT ITEM 705 – Seal Pavement Edge
9. ODOT ITEM 203 – Compacted Subgrade

MAJOR RESIDENTIAL & COMMERCIAL STREETS (COLLECTOR)

1. ODOT ITEM 448 – 1.5" Asphalt Concrete Surface Course, Type 1, PG64–22
2. ODOT ITEM 407 – Tack Coat (0.10 gal./sq. yd.)
3. ODOT ITEM 448 – 2" Asphalt Concrete Intermediate Course, Type 2, PG64–22
4. ODOT ITEM 407 – Tack Coat (0.10 gal./sq. yd.)
5. ODOT ITEM 301 – 7" Bituminous Aggregate Base (in 2 Courses)
6. ODOT ITEM 408 – Prime Coat (0.40 gal./sq. yd.)
7. ODOT ITEM 304 – 9" Crushed Limestone Aggregate Base (in 3 lifts)
8. ODOT ITEM 705 – Seal Pavement Edge
9. ODOT ITEM 203 – Compacted Subgrade

U.S. & STATE HIGHWAYS & INDUSTRIAL STREETS (ARTERIAL)

1. ODOT ITEM 442 – 1.5" Asphalt Concrete Surface Course, 12.5mm, Type A (448) (in 1 course)
2. ODOT ITEM 407 – Tack Coat (0.10 gal./sq. yd.)
3. ODOT ITEM 448 – 2.5" Asphalt Concrete Intermediate Course, 19mm, Type A (448) Intermediate Course (in 1 course)
4. ODOT ITEM 407 – Tack Coat (0.10 gal./sq. yd.)
5. ODOT ITEM 302 – 8" Bituminous Aggregate Base (in 2 Courses)
6. ODOT ITEM 408 – Prime Coat (0.40 gal./sq. yd.)
7. ODOT ITEM 304 – 12" Crushed Limestone Aggregate Base (in 3 lifts)
8. ODOT ITEM 705 – Seal Pavement Edge
9. ODOT ITEM 203 – Compacted Subgrade

NOTES:

1. The sections shown above are minimum thicknesses and shall be used unless a thorough pavement design is completed utilizing a geotechnical investigation and ODOT pavement design procedures.
2. Pavements for special conditions shall be approved in writing by the City Engineer.

ASPHALT STREET SECTION		
CITY OF LEBANON DEPARTMENT OF ENGINEERING	CITY OF LEBANON 1802	DATE 8/18/2006 2/07/2008 1/26/2012
APPROVED BY	STANDARD DRAWING	

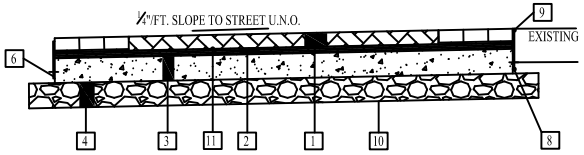

Partially Restrained Brick Walk

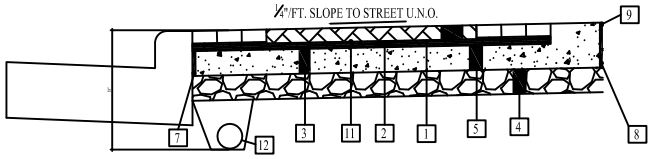

Restrained Brick Walk

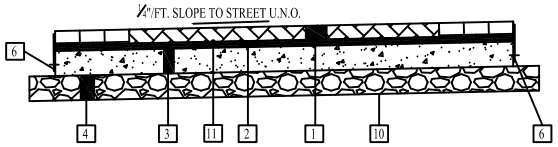

Unrestrained Brick Walk

Brick Walk Legend

1. 2¼"x4"x8" BRICK PAVERS AND 2¾"x4"x8" AT DRIVEWAYS LAYING PATTERN PER DETAILS.
2. 1" BITUMINOUS SETTING BED.
3. ODOT 608 - 4" CONCRETE (6" FOR HEAVY DUTY).
4. ODOT 304 - 4" AGGREGATE BASE (6" FOR HEAVY DUTY).
5. 2" PVC WEEPS CAST INTO SUBSLAB @ 10" O.C. FILLED WITH SAND.
6. ¼"x6" ALUMINUM EDGE RESTRAINT HOLD ½" BELOW SURFACE CONNECT TO SUBSLAB WITH HILTI SHOT AT 2'-0" O.C.
7. ½" EXPANSION MATERIAL (RECYCLED RUBBER OR VINYL ONLY).
8. ½" EXPANSION MATERIAL HOLD DOWN ½" BELOW SURFACE.
9. CAULKED JOINT.
10. ODOT ITEM 204 - COMPACTED SUBGRADE.
11. NEOPRENE MODIFIED ASPHALT TACK COAT.
12. 4" PERFORATED PE UNDERDRAIN WITH FILTER SOCK. BEDDED IN #9 GRITS

NOTE: HEAVY DUTY BRICK WALK FOR DRIVEWAY APPROACHES SHALL CONSIST OF 2-3/4" THICK PAVERS 6" CONCRETE, AND 6" ODOT ITEM 304 GRAVEL BASE AS SHOWN.

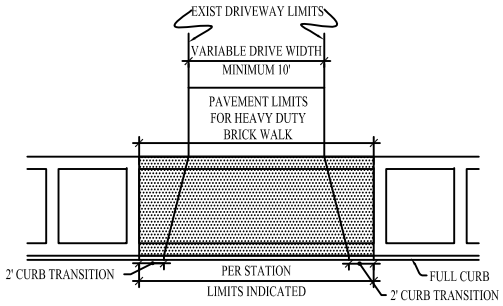

Brick Apron

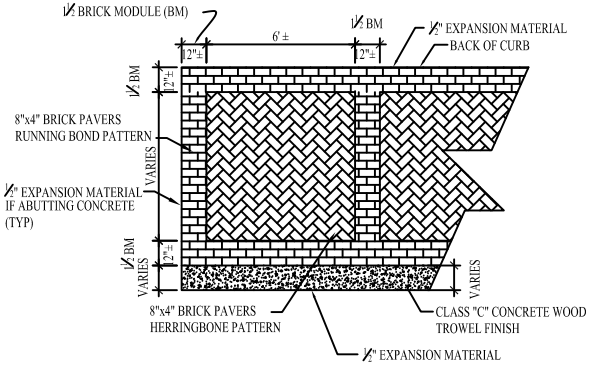

Restrained Brick Walk

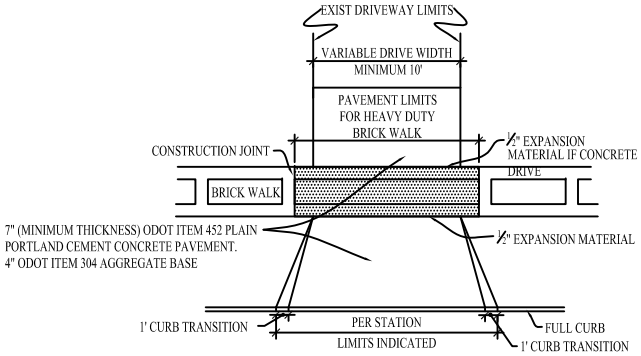

Concrete Driveway and Apron

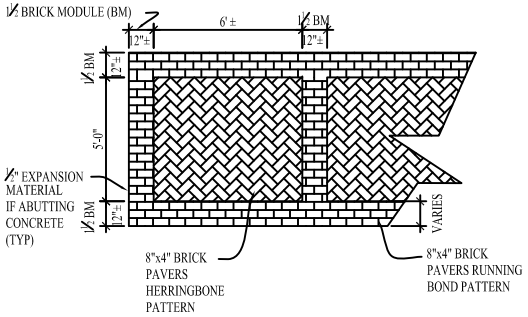

Typical Brick Walk

ALL PAVERS SHALL BE MANUFACTURED BY PINE HALL.

STANDARD PAVERS:
ENGLISH EDGE PARK ACCENT
ENGLISH EDGE FULL RANGE.

HEAVY DUTY PAVERS:
OLD TAVERN A.F.
OLD TOWNE A.F.

NEW/REPLACEMENT BRICKWORK SHALL MATCH SURROUNDING BRICKWORK.

ALL JOINTS SHALL BE SANDED.

ALL ACCENT BLOCKS SHALL BE 12" X 12" INDIANA LIMESTONE AND SHALL MATCH EXISTING ACCENT STONES.

BRICK PAVER SIDEWALK		
CITY OF LEBANON DEPARTMENT OF ENGINEERING	CITY OF LEBANON 1802	DATE 4/1/2010
APPROVED BY:	STANDARD DRAWING	

Sanitary Standard Drawings

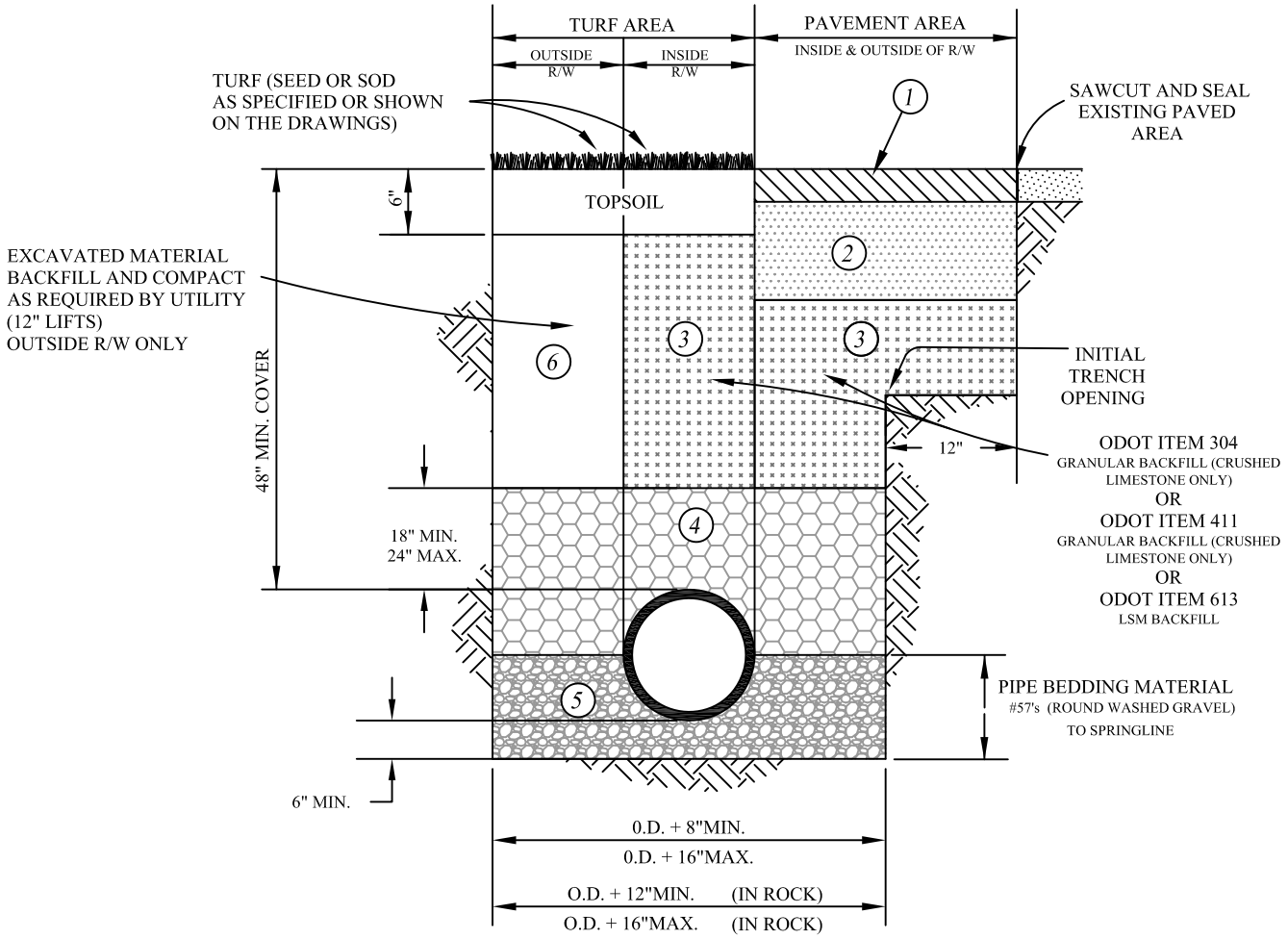

1. ODOT ITEM 448 - ASPHALT CONCRETE - INCLUDES INTERMEDIATE & SURFACE COURSES - REFER TO PAVEMENT DETAILS
2. ODOT ITEM 301 - BITUMINOUS AGGREGATE BASE (IN 2 COURSES) - REFER TO PAVEMENT DETAILS
3. ODOT ITEM 304 (CRUSHED LIMESTONE ONLY) OR ODOT ITEM 411 (CRUSHED LIMESTONE ONLY) GRANULAR BACKFILL COMPACTED TO 90 PERCENT OF MAXIMUM DENSITY IN MAXIMUM OF 8 INCH LIFTS OR ODOT ITEM 613 LSM - REFER TO PAVEMENT DETAILS
4. #9'S/GRITS GRANULAR BACKFILL (18" MINIMUM/24" MAXIMUM) ABOVE TOP OF PIPE MATERIAL IS TO BE PLACED AND COMPACTED TO 90 PERCENT OF MAXIMUM DENSITY IN 6 INCH MAXIMUM LIFTS
5. PIPE BEDDING & HAUNCHING MATERIAL - #57'S (ROUND WASHED GRAVEL) MATERIAL TO BE PLACED AND COMPACTED TO 90 PERCENT OF MAXIMUM DENSITY IN 6 INCH MAXIMUM LIFTS
6. EXCAVATED MATERIAL BACKFILL AND COMPACTED TO A MINIMUM OF 98 PERCENT PROCTOR IN MAXIMUM OF 12" LIFTS OUTSIDE R/W ONLY

SANITARY SEWER TRENCH DETAIL

CITY OF LEBANON
DEPARTMENT OF
ENGINEERING

CITY OF LEBANON 1802

DATE
07/25/2006
03/06/2007
2/07/2008
9/19/2011

APPROVED BY:

STANDARD DRAWING

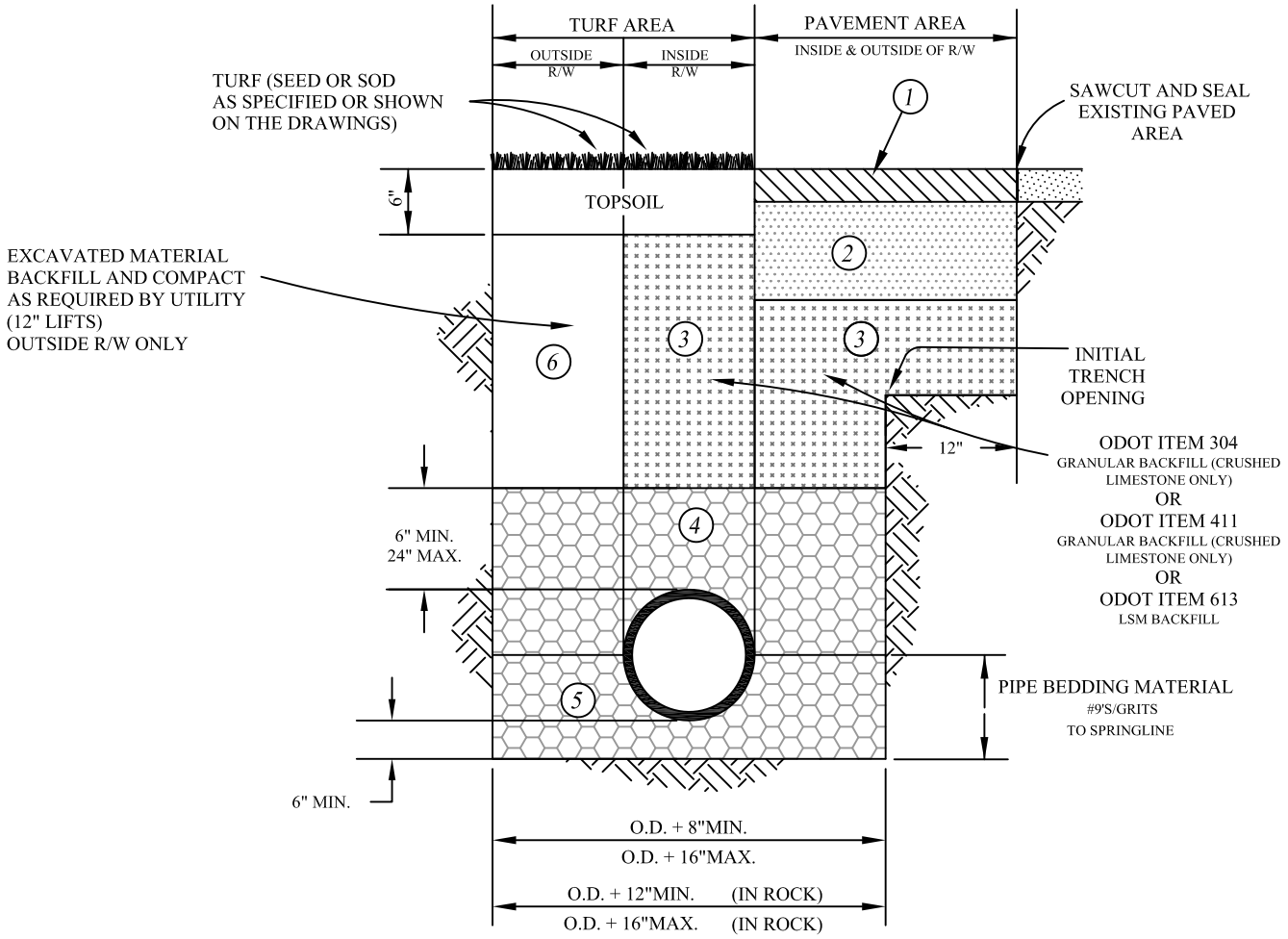

1. ODOT ITEM 448 - ASPHALT CONCRETE - INCLUDES INTERMEDIATE & SURFACE COURSES - REFER TO PAVEMENT DETAILS
2. ODOT ITEM 301 - BITUMINOUS AGGREGATE BASE (IN 2 COURSES) - REFER TO PAVEMENT DETAILS
3. ODOT ITEM 304 (CRUSHED LIMESTONE ONLY) OR ODOT ITEM 411 (CRUSHED LIMESTONE ONLY) GRANULAR BACKFILL COMPACTED TO 90 PERCENT OF MAXIMUM DENSITY IN MAXIMUM OF 8 INCH LIFTS OR ODOT ITEM 613 LSM - REFER TO PAVEMENT DETAILS
4. #9'S/GRITS GRANULAR BACKFILL (18" MINIMUM/24" MAXIMUM) ABOVE TOP OF PIPE MATERIAL IS TO BE PLACED AND COMPACTED TO 90 PERCENT OF MAXIMUM DENSITY IN 6 INCH MAXIMUM LIFTS
5. PIPE BEDDING & HAUNCHING MATERIAL - #9'S/GRITS MATERIAL TO BE PLACED AND COMPACTED TO 90 PERCENT OF MAXIMUM DENSITY IN 6 INCH MAXIMUM LIFTS
6. EXCAVATED MATERIAL BACKFILL AND COMPACTED TO A MINIMUM OF 98 PERCENT PROCTOR IN MAXIMUM OF 12" LIFTS OUTSIDE R/W ONLY

SANITARY LATERAL TRENCH DETAIL		
CITY OF LEBANON DEPARTMENT OF ENGINEERING	CITY OF LEBANON 1802	DATE 10/26/2011
APPROVED BY:	STANDARD DRAWING	

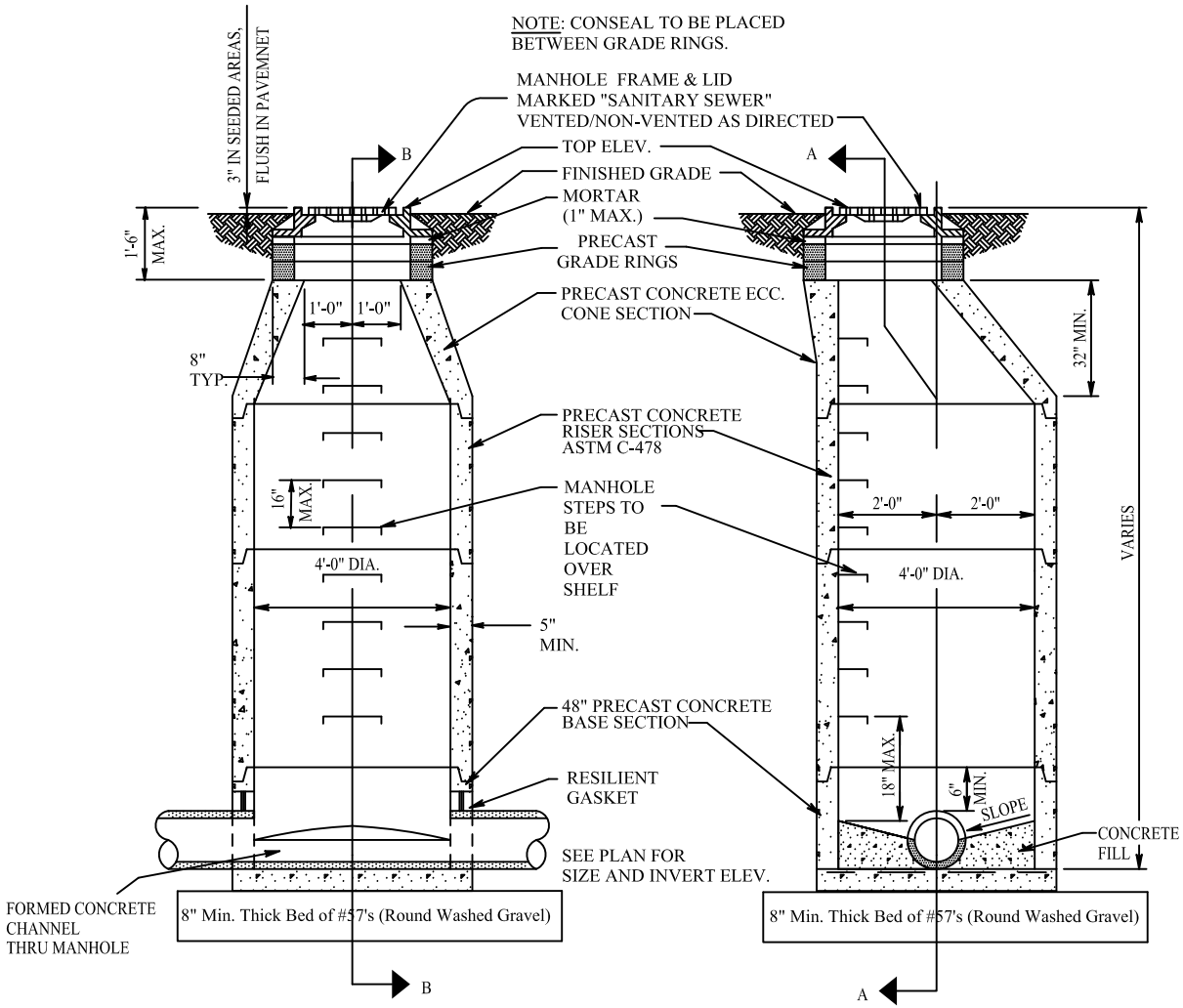

SECTION A-A

SECTION B-B

JOINTS BETWEEN SLAB TOP, RISER SECTIONS AND BASE SHALL BE "O" RING TYPE ASTM C-443

STANDARD SANITARY MANHOLE

CITY OF LEBANON
DEPARTMENT OF
ENGINEERING

CITY OF LEBANON 1802

DATE
7/25/2006
1/25/2012

APPROVED BY

STANDARD DRAWING

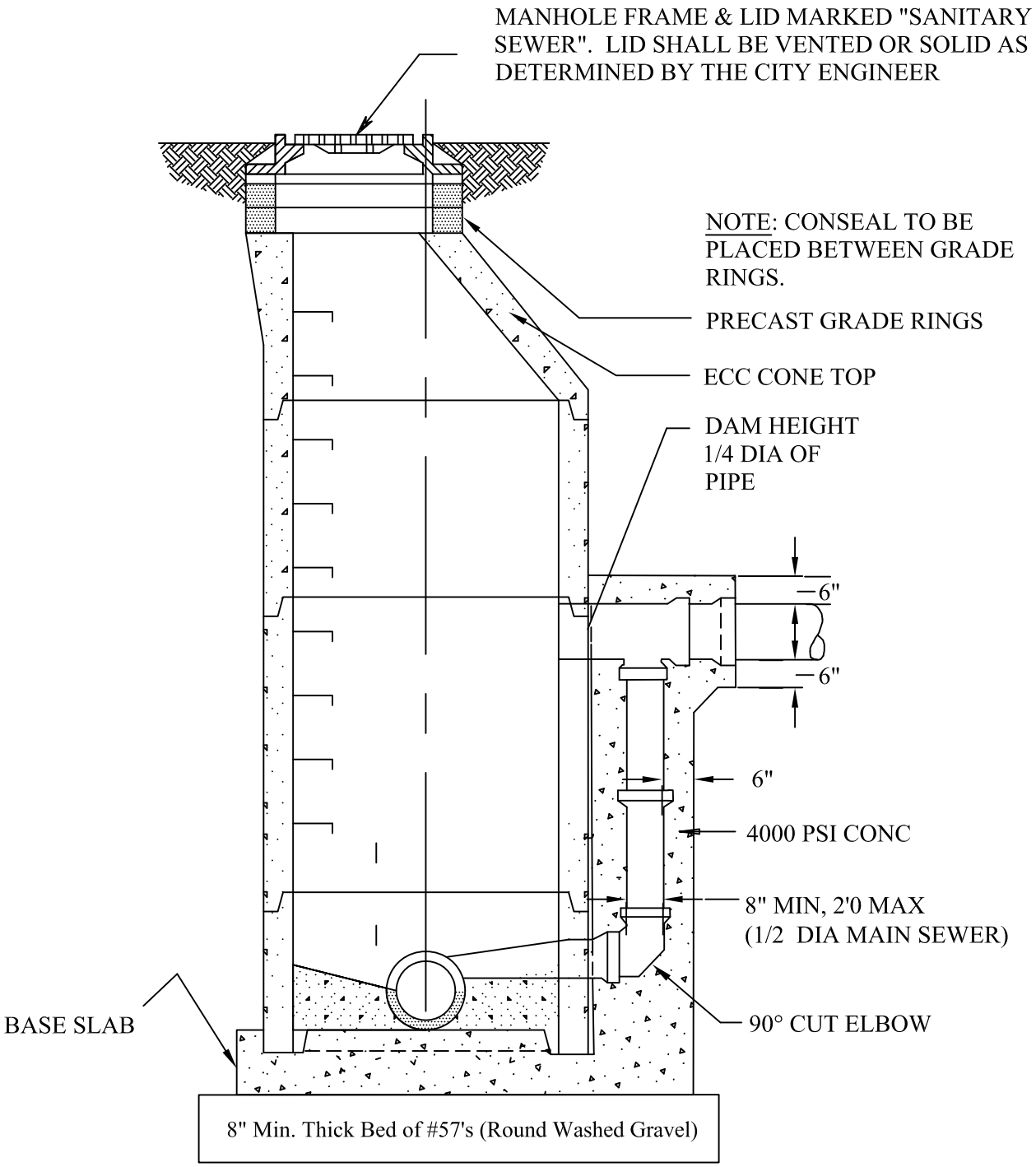

NOTE: DROP MH SHALL BE CONSTRUCTED WHERE DISTANCE BETWEEN INVERTS EXCEEDS 2'-0"

STANDARD SANITARY DROP MANHOLE		
CITY OF LEBANON DEPARTMENT OF ENGINEERING	CITY OF LEBANON 1802	DATE 7/25/2006 1/25/2012
APPROVED BY:	STANDARD DRAWING	

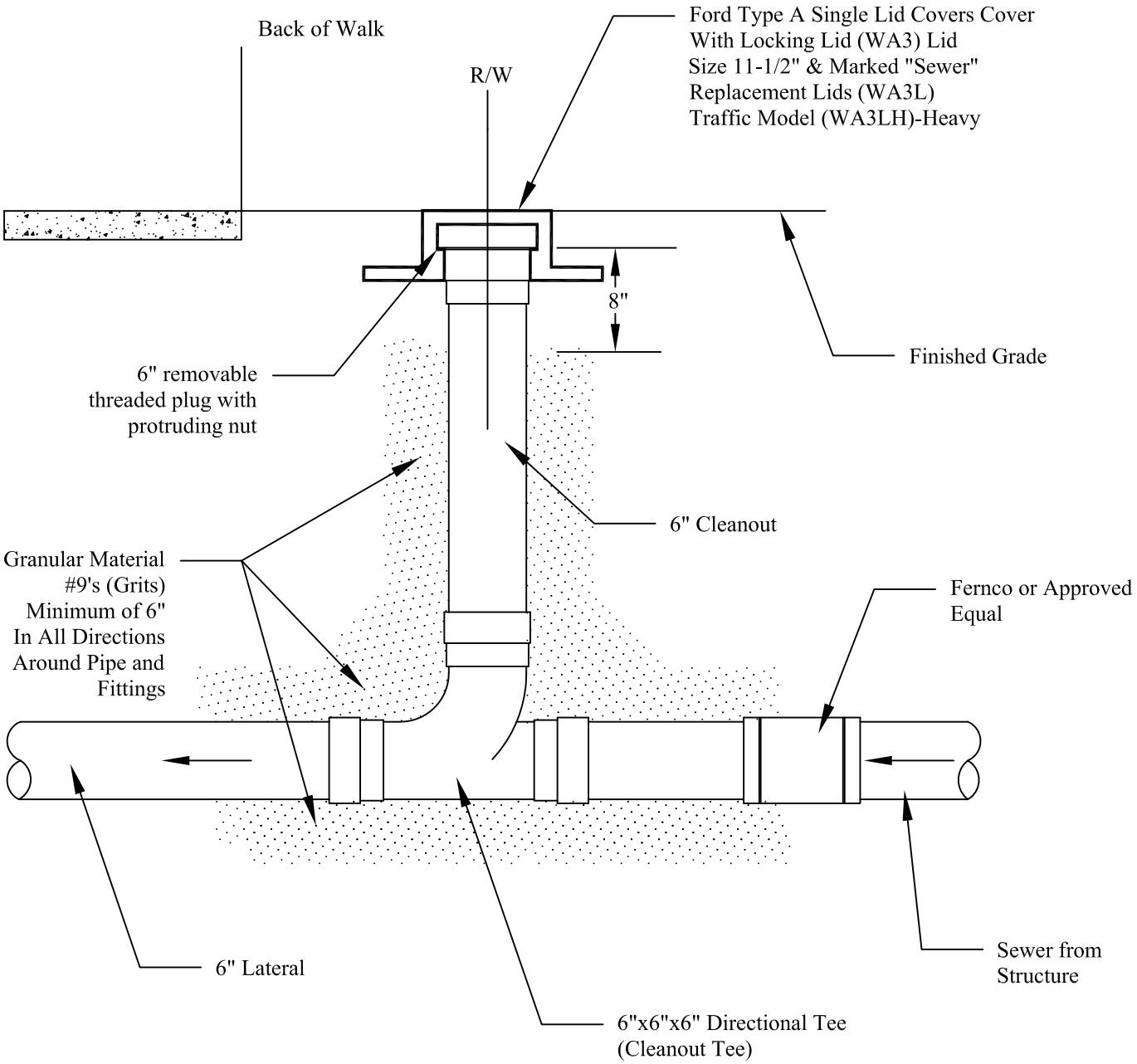

NOTES:

1. All Sanitary Lateral Related Pipe and Fittings Shall be Gasketed SDR-35, SDR-26, or Class 53 DI. Refer to the City of Lebanon Land Development Design and Construction Standards Manual.
2. Cleanouts Shall Be Placed Every 100' And At All Bends.

CLEANOUT DETAIL		
CITY OF LEBANON DEPARTMENT OF ENGINEERING	CITY OF LEBANON 1802	DATE 7/25/2006 2/07/2008 1/25/2012
APPROVED BY:	STANDARD DRAWING	

Storm Standard Drawings

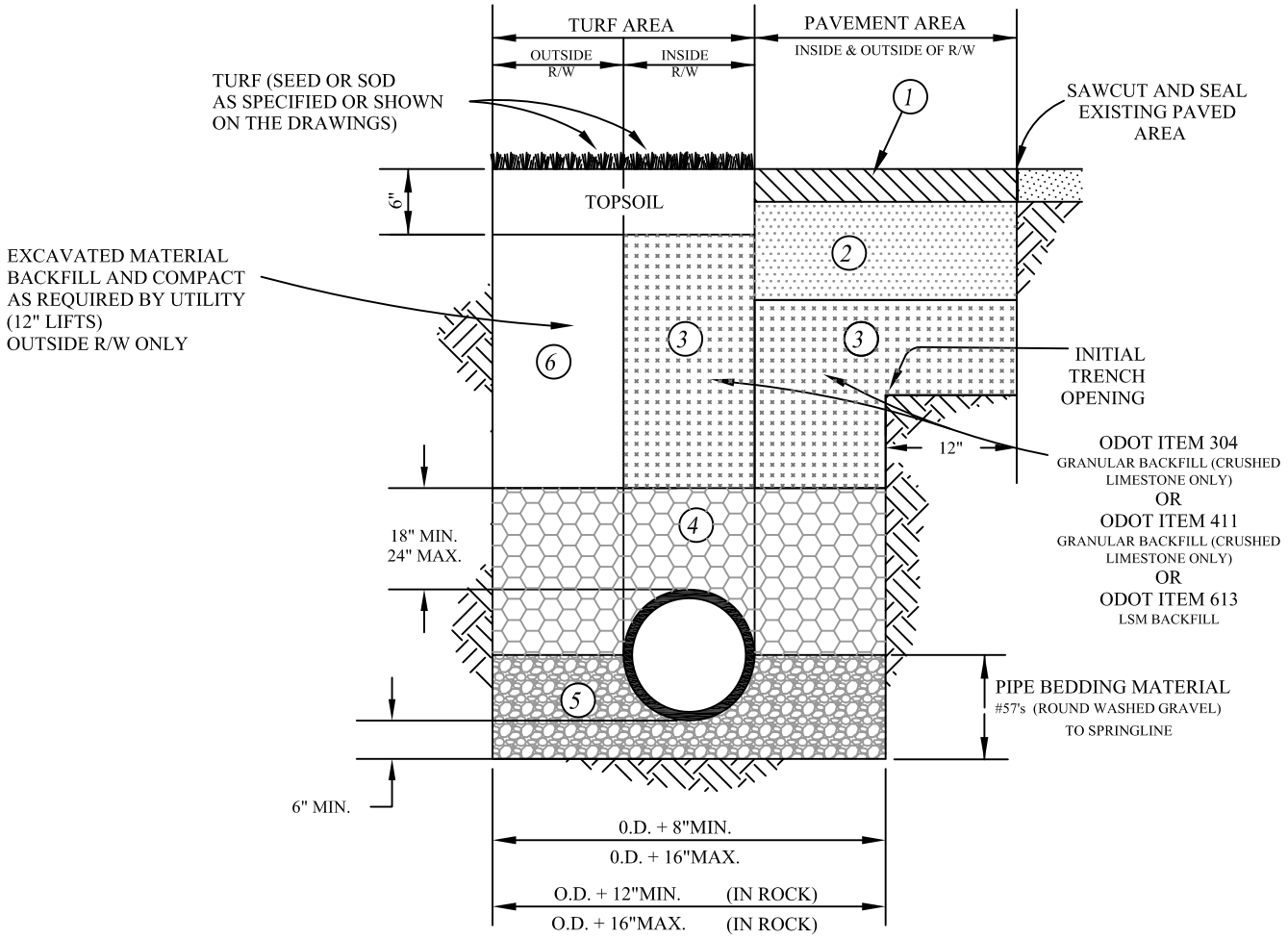

1. ODOT ITEM 448 - ASPHALT CONCRETE - INCLUDES INTERMEDIATE & SURFACE COURSES - REFER TO PAVEMENT DETAILS
2. ODOT ITEM 301 - BITUMINOUS AGGREGATE BASE (IN 2 COURSES) - REFER TO PAVEMENT DETAILS
3. ODOT ITEM 304 (CRUSHED LIMESTONE ONLY) OR ODOT ITEM 411 (CRUSHED LIMESTONE ONLY) GRANULAR BACKFILL COMPACTED TO 90 PERCENT OF MAXIMUM DENSITY IN MAXIMUM OF 8 INCH LIFTS OR ODOT ITEM 613 LSM - REFER TO PAVEMENT DETAILS
4. #9'S/GRITS GRANULAR BACKFILL (18" MINIMUM/24" MAXIMUM) ABOVE TOP OF PIPE MATERIAL IS TO BE PLACED AND COMPACTED TO 90 PERCENT OF MAXIMUM DENSITY IN 6 INCH MAXIMUM LIFTS
5. PIPE BEDDING & HAUNCHING MATERIAL - #57'S (ROUND WASHED GRAVEL) MATERIAL TO BE PLACED AND COMPACTED TO 90 PERCENT OF MAXIMUM DENSITY IN 6 INCH MAXIMUM LIFTS
6. EXCAVATED MATERIAL BACKFILL AND COMPACTED TO A MINIMUM OF 98 PERCENT PROCTOR IN MAXIMUM OF 12" LIFTS OUTSIDE R/W ONLY

STORM SEWER TRENCH DETAIL

CITY OF LEBANON
DEPARTMENT OF
ENGINEERING

CITY OF LEBANON 1802

DATE
07/25/2006
03/06/2007
2/07/2008
9/19/2011

APPROVED BY:

STANDARD DRAWING

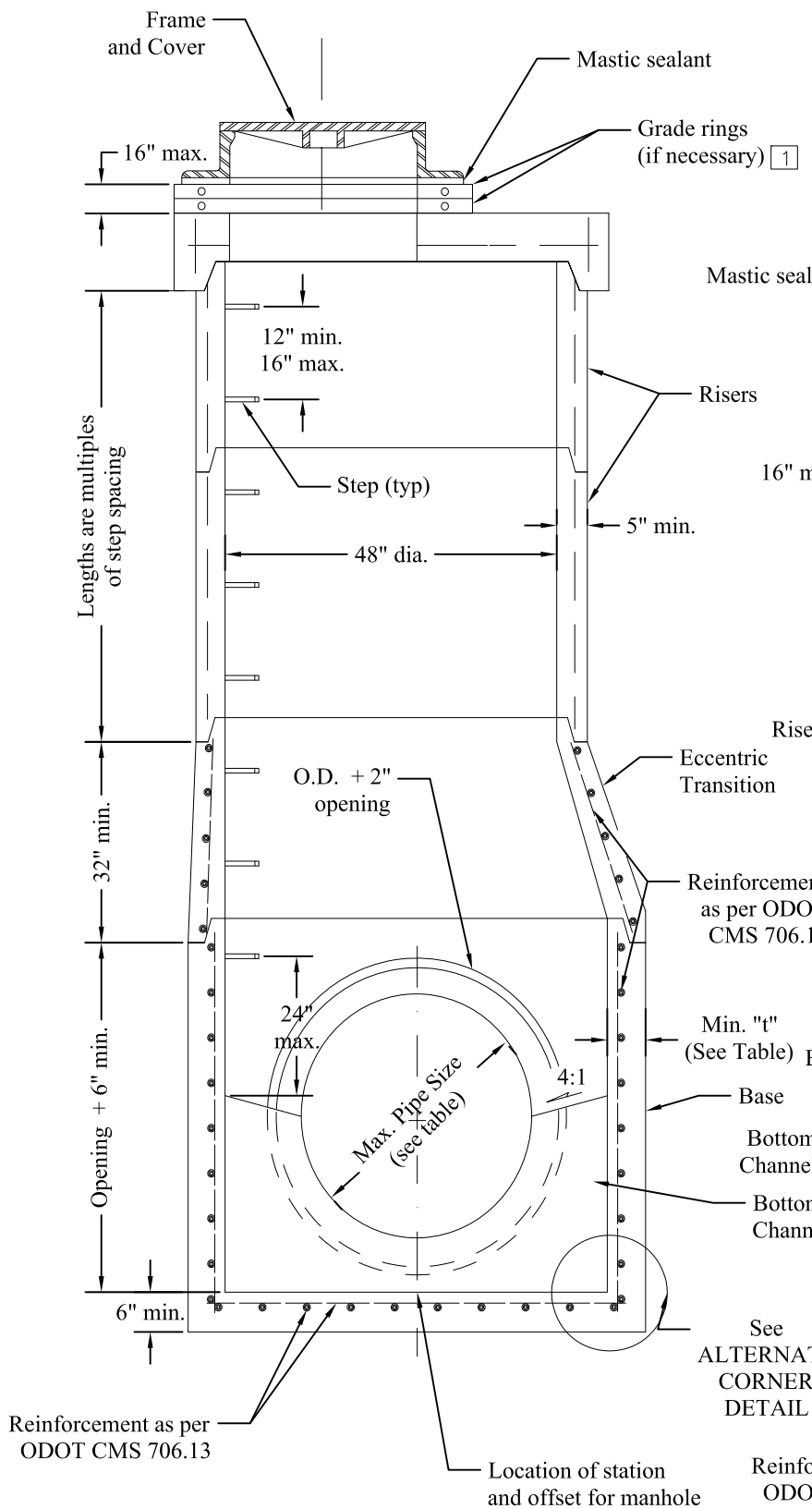

60" to 108" PRECAST BASE

SEE TABLE FOR MAXIMUM PIPE SIZES

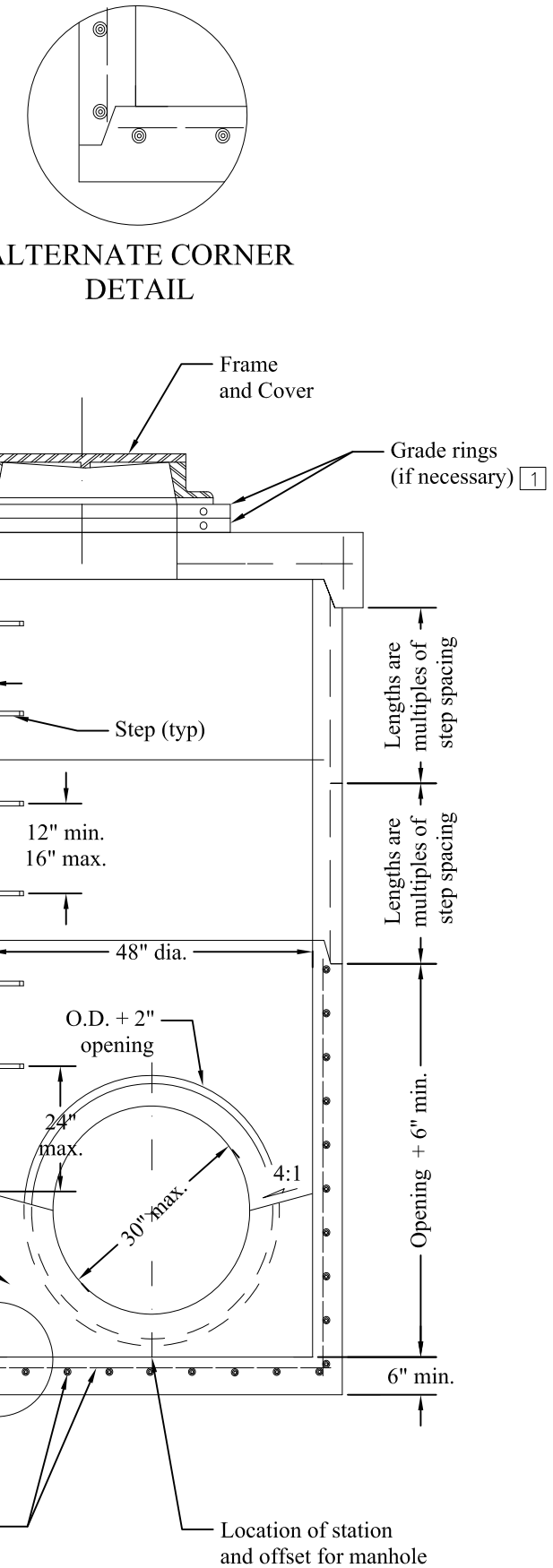

48" PRECAST BASE

SEE TABLE FOR MAXIMUM PIPE SIZES

SECTION VIEWS OF REINFORCED PRECAST MANHOLES

NOTES

GENERAL: With normal soil and site conditions this standard precast manhole may be used for any required manhole depth.
Sections of the precast manhole shall be cast and assembled with either all tongue or all groove ends up. Lift holes may be provided in each section for handling.
Handling device for the flat slab shall be left in place.

TOP: This section shall be a flat slab unless an eccentric cone is specified.

TRANSITION (OR REDUCER): This section can be either eccentric cone or flat slab.

BASE: Manhole No. 3 is shown with a monolithic floor and riser which may be cast in one or two operations. A permissible alternate is to cast and ship the floor and barrel separately. Openings for inlet and outlet pipes shall be provided, either when the unit is cast or later, to meet project requirements. Bottom channels may be formed of concrete, precast in the base or field constructed as shown on ODOT SCD MH-1.1 and MH 3.1.

RISER SECTIONS: Openings for 18" [450] and smaller inlet pipes may be either prefabricated, or cut in the field provided the sides of the pipe at the springline do not project into the manhole.

CONNECTIONS: Connections between precast manhole sections and pipes on sanitary sewers may be sealed with resilient connectors conforming to ASTM C 923.

JOINT SEAL: Seal between precast manhole sections on sanitary sewers shall be resilient and flexible gasket joints per ODOT CMS 706.11.

OPENINGS: The maximum pipe opening shall be the O.D. of the pipe being supplied plus 2" [50] when fabricated or field cut. Fill any voids per ODOT CMS 601.

MATERIALS: Materials for bases and other precast sections, including reinforcement hereon, shall comply with the requirements of ODOT CMS 706.13.

DROP PIPE: When specified on the plans, drop pipe shall be constructed as shown on ODOT SCD MH-1.1.

STEPS: Steps shall comply with the City of Lebanon MH Step Standard Drawing.

FRAMES AND COVERS: Shall comply with the requirements set forth on ODOT SCD MH-1.1.

TOP SLAB REBAR: Reinforcing steel used within the top slab shall be epoxy coated.

LEGEND

1 Reconstruction to grade only. Approved materials are kept on file by the Office of Materials Management.

ALL MANHOLES SHALL BE BEDDED WITH A MINIMUM OF 8" OF ROUND WASHED 57's

ALL PIPE TIE-INS TO MANHOLES SHALL HAVE CONCRETE COLLARS

STORM MANHOLE

CITY OF LEBANON
DEPARTMENT OF
ENGINEERING

CITY OF LEBANON 1802

DATE
7/25/2006
2/07/2008

APPROVED BY:

STANDARD
DRAWING

MAXIMUM PIPE SIZES		
BASE I.D.	MIN. "t"	MAX. PIPE SIZE
60"	5"	36"
72"	6"	48"
84"	7"	54"
90"	7-1/2"	60"
96"	8"	66"
108"	9"	72"

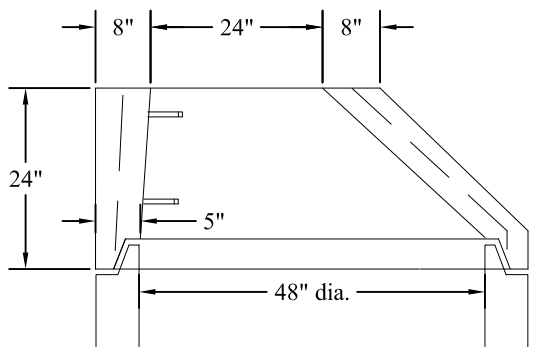

ECCENTRIC CONE TOP

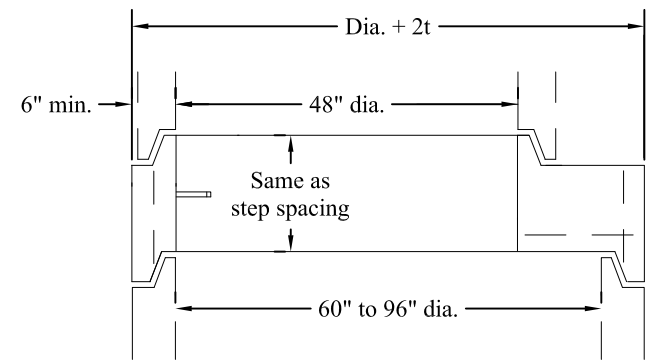

FLAT SLAB
TRANSITION TOP

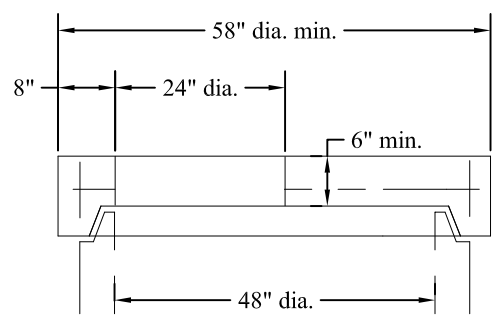

FLAT SLAB TOP

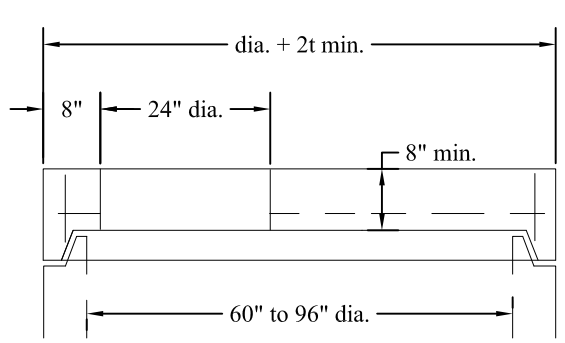

FLAT SLAB TOP

ALL PIPE TIE-INS TO MANHOLES
SHALL HAVE CONCRETE COLLARS

STORM MANHOLE

CITY OF LEBANON
DEPARTMENT OF
ENGINEERING

DATE
7/25/2006
2/7/2008

APPROVED
BY:

STANDARD
DRAWING

DROP GUTTER 2" IN 20' EACH SIDE OF CATCH BASIN FOR NORMAL TRANSVERSE SLOPE AND 1/2" WITHIN BLOCK OUT FOR COMBINED CURB AND GUTTER.

ALL PIPE TIE-INS TO CATCH BASINS SHALL HAVE CONCRETE COLLARS

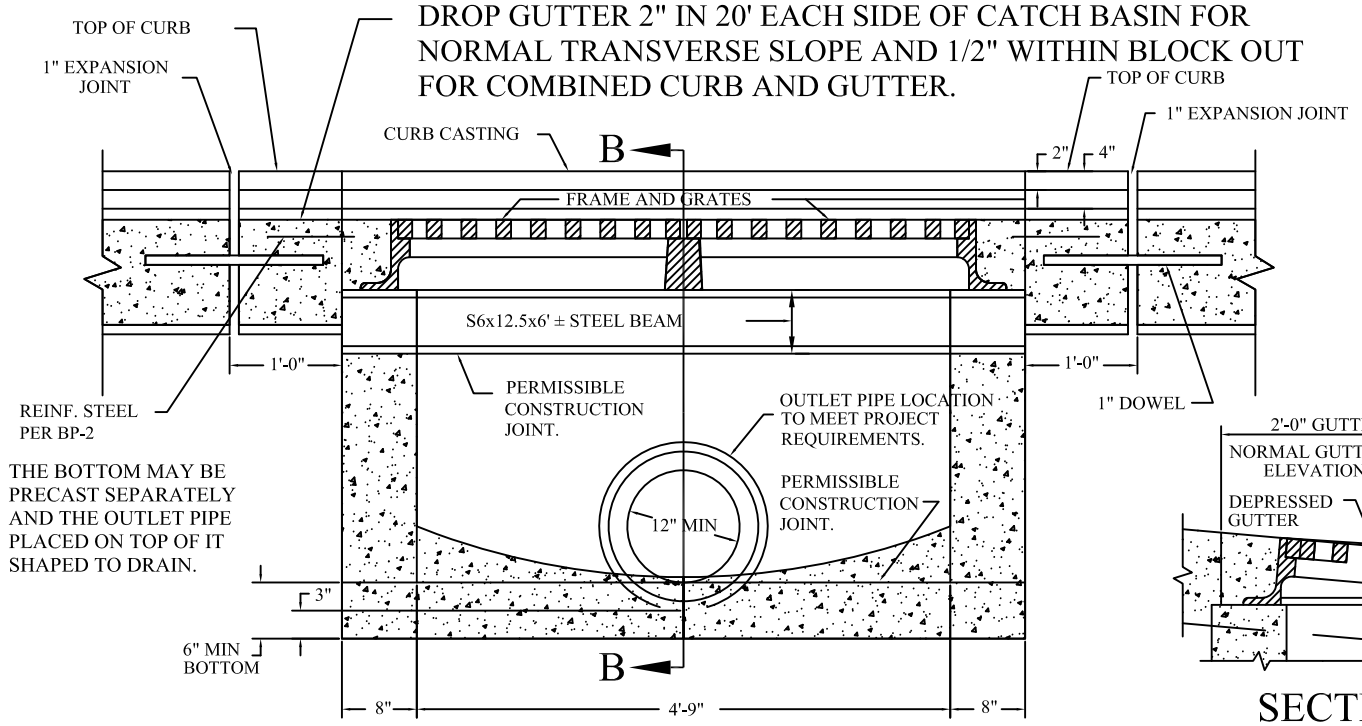

SECTION A-A

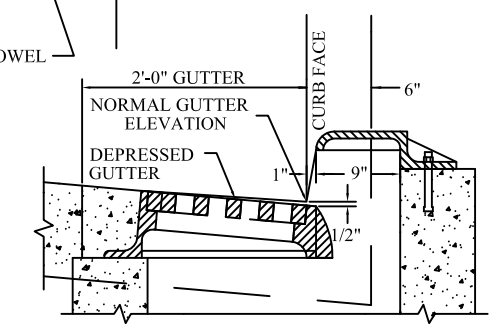

SECTION B-B
WITH CURB & GUTTER

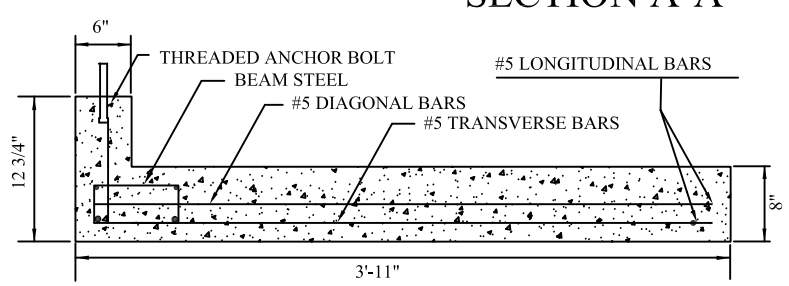

SLAB DETAIL

PIPE SIZE	dim. "A"
12" - 21"	80"
24" - 27"	89"
30" - 36"	99"

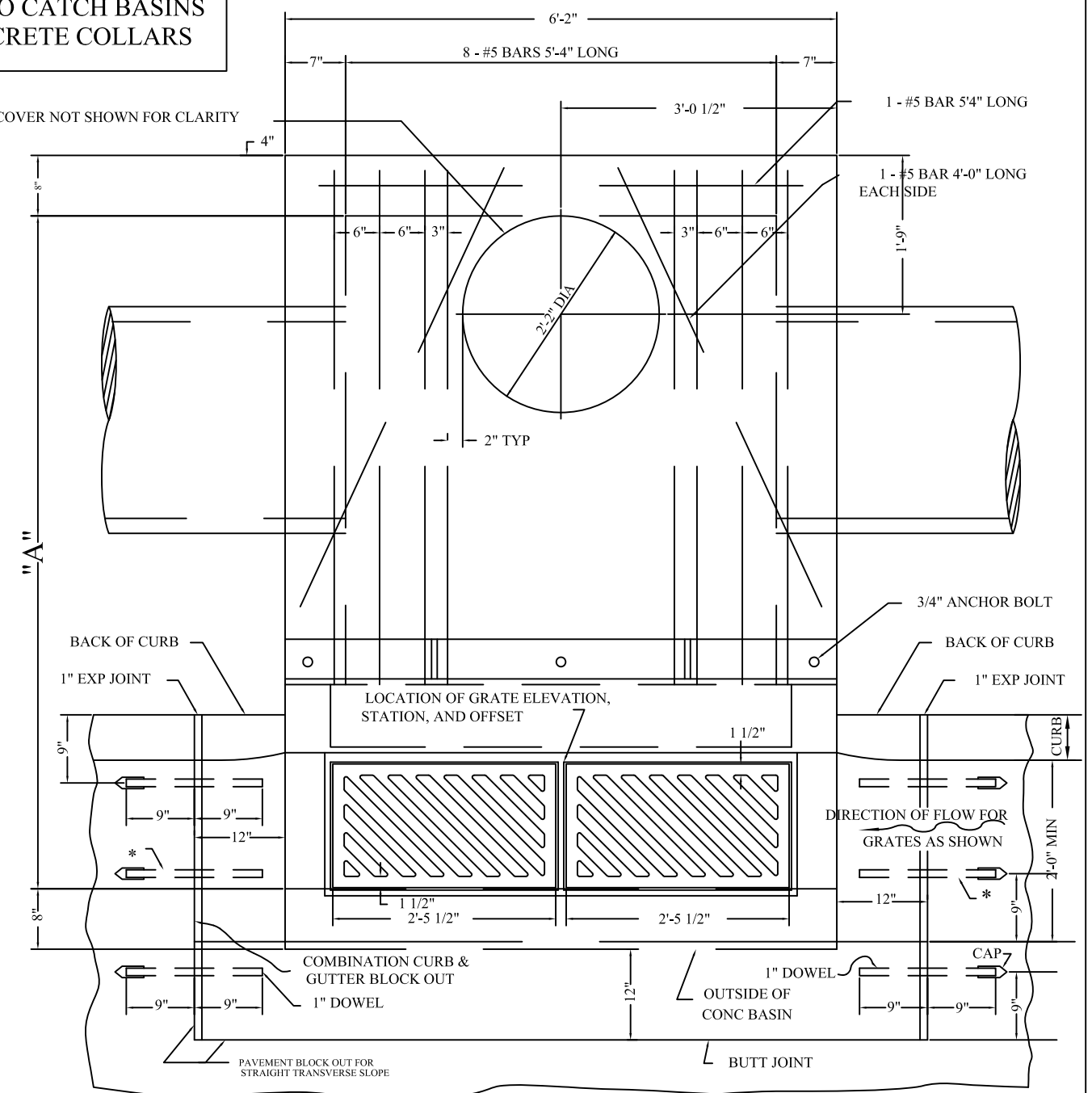

PLAN OF CATCH BASIN
AND PAVEMENT JOINTS

* DOWEL LOCATION FOR CURB AND GUTTER

NOTES

BEDDING:
ALL STRUCTURES SHALL BE BEDDED WITH A MINIMUM OF 6" OF ROUND WASHED 57'S.

GRATES:
STANDARD GRATE AS SHOWN IN THE PLAN VIEW SHALL BE PROVIDED UNLESS THE PLANS SPECIFICALLY REQUIRE GRATE "V". PLACE GRATE SO THE DIAGONAL BARS DIRECT DRAINAGE FLOW TOWARD THE CURB. ALL BAR EDGES TO BE ROUNDED 1/8" RADIUS.

CASTINGS:
THE DESIGN SHALL BE ESSENTIALLY THE SAME AND EQUALLY AS STRONG AS THOSE SHOWN HERON. MINIMUM WEIGHTS ARE: CURB CASTING 305 LBS., TWO GRATES 254 LBS., FRAME 590 LBS., AND TWO "V" GRATES 210 LBS. BEARING AREAS OF FRAME AND GRATE SHALL BE SO FITTED AND FINISHED, WITHOUT PROJECTIONS, AS TO PRO- VIDE A FIRM AND EVEN SEAT FOR ALL PORTIONS OF THE GRATE IN THE FRAME WITHOUT ROCKING.

DOWELS:
FOUR 1" x 18" ARE REQUIRED FOR CONCRETE PAVEMENT OF GUTTER BLOCKOUT. SEE ODOT BP-4 FOR DOWEL DETAILS.

BLOCKOUT SHALL BE PAVED WITH CLASS C CONCRETE IN PCC PAVEMENT OR GUTTER AND PAID FOR AS PART OF THE PAVEMENT OR GUTTER WITH NO DEDUCTION IN PAVE- MENT, CURB OR GUTTER QUANTITIES BECAUSE OF CASTINGS. A CLASS C CONCRETE APRON THE SIZE OF THE 2' GUTTER BLOCKOUT SHALL BE CAST IN PLACE IN ASPHALT PAVEMENT (NO DOWELS REQUIRED) WITH THE COST INCLUDED IN THE CATCH BASIN BID PRICE. NO DEDUCTIN TO BE MADE IN CURB QUANTITIES.

PRECAST CONSTRUCTION IS PERMITTED, EXCEPT FOR APRON, AND CONCRETE SHALL MEET REQUIREMENTS OF 706.13 WITH 6% ±2% AIR VOID CONTENT IN THE HARDENED CONCRETE. PRECAST WALLS SHALL HAVE A MINIMUM THICKNESS OF 6" AND REINFORCING SHALL BE SUFFICIENT TO PERMIT SHIPPING AND PLACEMENT WITHOUT DAMAGE.

GRATES:
STANDARD GRATE AS SHOWN IN THE PLAN VIEW SHALL BE PROVIDED UNLESS THE PLANS SPECIFICALLY REQUIRE GRATE "V". PLACE GRATE SO THE DIAGONAL BARS DIRECT DRAINAGE FLOW TOWARD THE CURB. ALL BAR EDGES TO BE ROUNDED 1/8" RADIUS.

* STEPS SHALL BE PROVIDED WHERE THE DEPTH EXCEEDS 48" AND SHALL MEET THE REQUIREMENTS OF THE CITY OF LEBANON

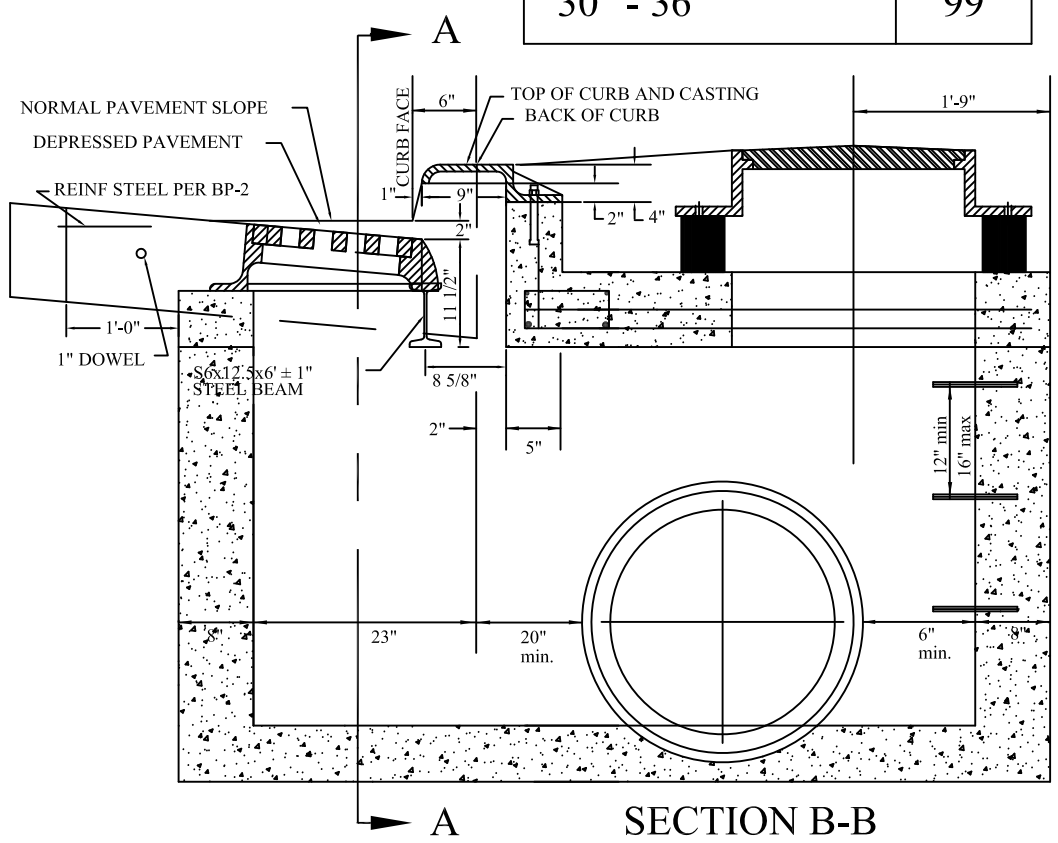

SECTION B-B

MODIFIED CB-3 CATCH BASIN

CITY OF LEBANON
DEPARTMENT OF
ENGINEERING

CITY OF LEBANON 1802

DATE
7/25/2006
03/06/2007
2/07/2008
8/24/2009
5/17/2010

APPROVED BY:

STANDARD DRAWING

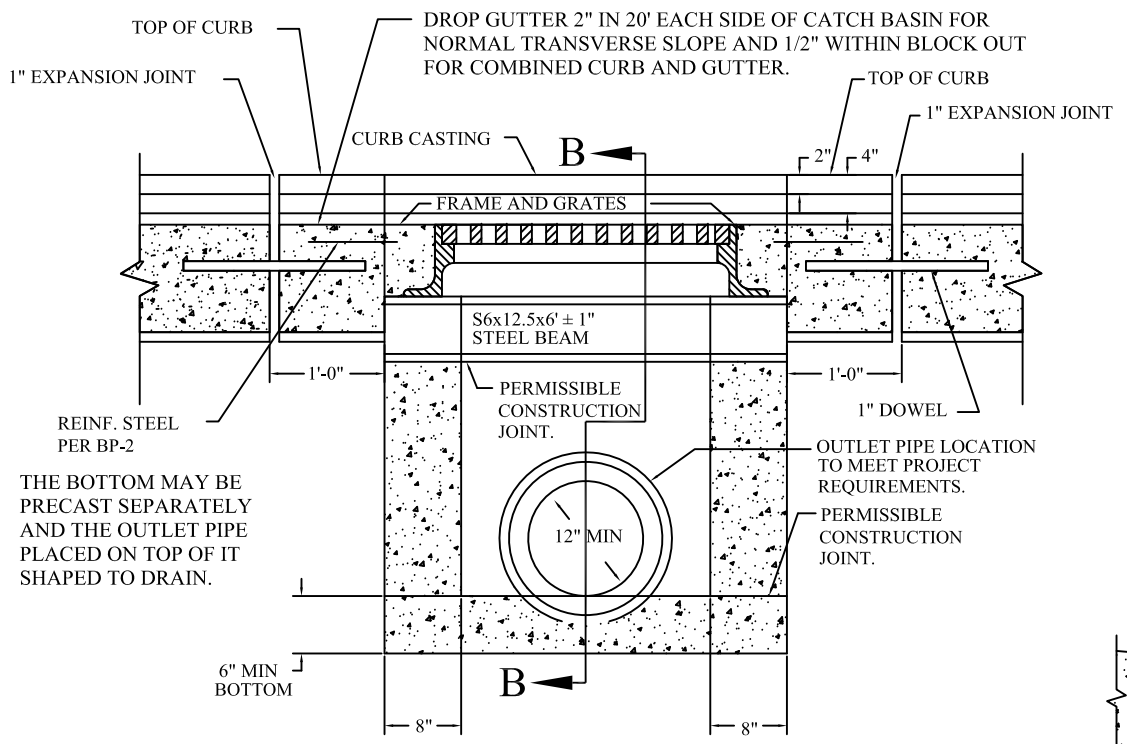

SECTION A-A

PIPE SIZE	dim. "A"
12" - 21"	80"
24" - 27"	89"
30" - 36"	99"

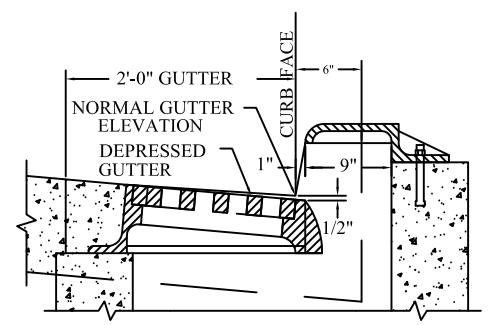

SECTION B-B
WITH CURB & GUTTER

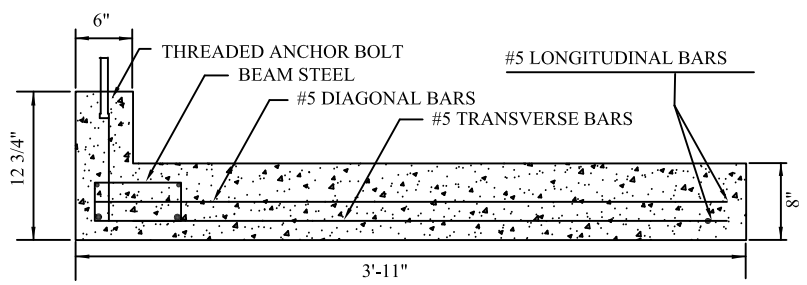

SLAB DETAIL

ALL PIPE TIE-INS TO CATCH BASINS SHALL HAVE CONCRETE COLLARS

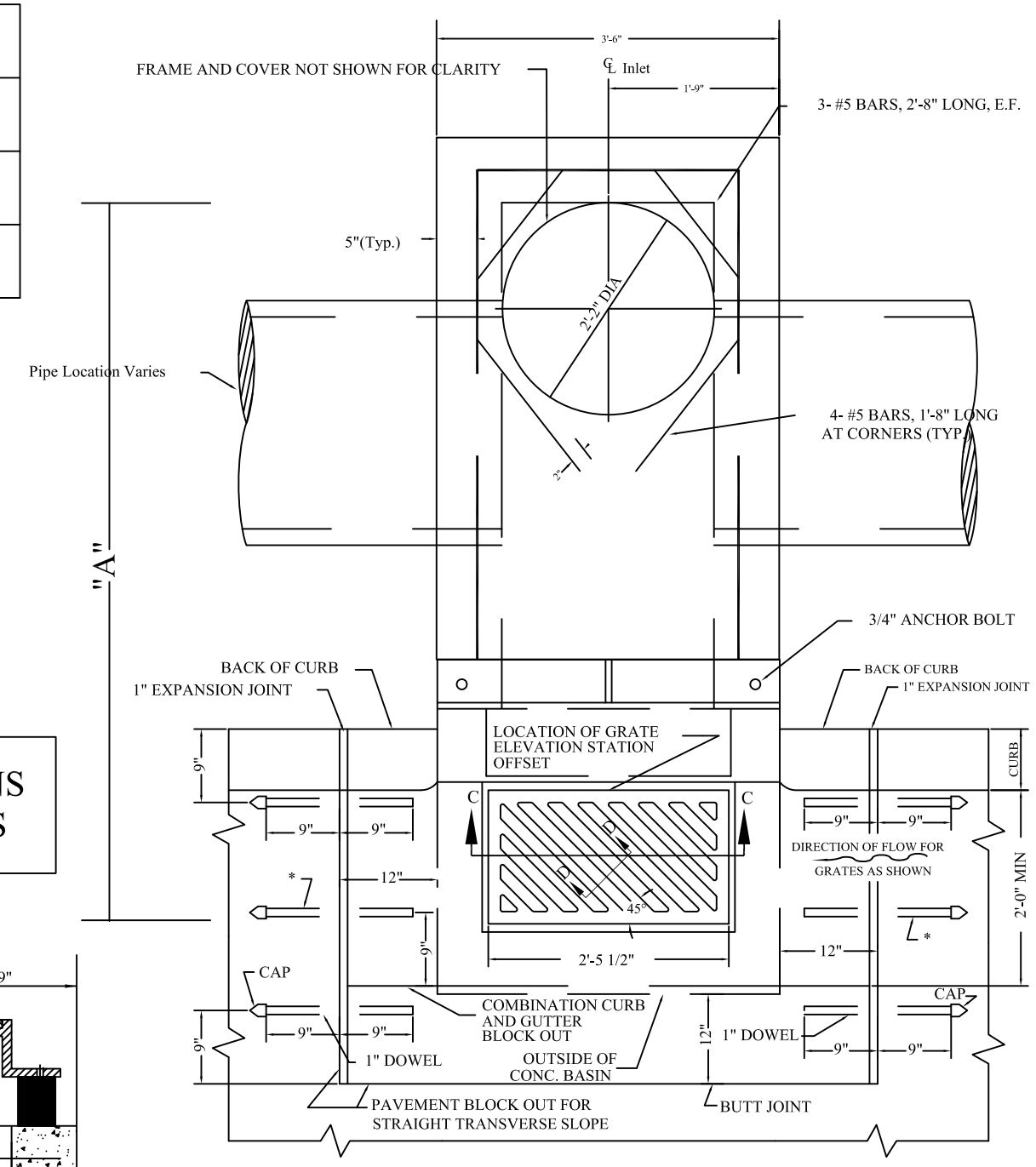

PLAN OF CATCH BASIN
AND PAVEMENT JOINTS

* DOWEL LOCATION FOR CURB AND GUTTER

NOTES

BEDDING:
ALL STRUCTURES SHALL BE BEDDED WITH A MINIMUM OF 6" OF ROUND WASHED 57'S.

GRATES:
STANDARD GRATE AS SHOWN IN THE PLAN VIEW SHALL BE PROVIDED UNLESS THE PLANS SPECIFICALLY REQUIRE GRATE "V". PLACE GRATE SO THE DIAGONAL BARS DIRECT DRAINAGE FLOW TOWARD THE CURB. ALL BAR EDGES TO BE ROUNDED 1/8" RADIUS.

CASTINGS:
THE DESIGN SHALL BE ESSENTIALLY THE SAME AND EQUALLY AS STRONG AS THOSE SHOWN HERON. MINIMUM WEIGHTS ARE: CURB CASTING 170 LBS., STANDARD GRATE 127 LBS., FRAME 320 LBS., AND "V" GRATE 105 LBS. BEARING AREAS OF FRAME AND GRATE SHALL BE SO FITTED AND FINISHED AS TO PROVIDE A FIRM AND EVEN SEAT FOR ALL PORTIONS OF THE GRATE IN THE FRAME NO PROJECTIONS SHALL EXIST ON BEARING AREAS OF EITHER CASTING AND THE GRATE WITHOUT ROCKING.

CONCRETE DOWELS:
FOUR 1" x 18" ARE REQUIRED FOR PAVEMENT OF GUTTER BLOCKOUT. SEE ODOT BP-4 FOR DOWEL DETAILS.

BLOCKOUT SHALL BE PAVED WITH CLASS C CONCRETE IN PCC PAVEMENT OR GUTTER AND PAID FOR AS PART OF THE PAVEMENT OR GUTTER WITH NO DEDUCTION IN PAVE- MENT, CURB OR GUTTER QUANTITIES BECAUSE OF CASTINGS. A CLASS C CONCRETE APRON THE SIZE OF THE 2' GUTTER BLOCKOUT SHALL BE CAST IN PLACE IN ASPHALT PAVEMENT (NO DOWELS REQUIRED) WITH THE COST INCLUDED IN THE CATCH BASIN BID PRICE. NO DEDUCTIN TO BE MADE IN CURB QUANTITIES.

PRECAST CONSTRUCTION IS REQUIRED, EXCEPT FOR APRON, AND CONCRETE SHALL MEET REQUIREMENTS OF 706.13 WITH 6% ±2% AIR VOID CONTENT IN THE HARDENED CONCRETE. PRECAST WALLS SHALL HAVE A MINIMUM THICKNESS OF 6" AND REINFORCING SHALL BE SUFFICIENT TO PERMIT SHIPPING AND PLACEMENT WITHOUT DAMAGE.

STEPS SHALL BE PROVIDED WHERE THE DEPTH EXCEEDS 48" AND SHALL MEET THE REQUIREMENTS OF THE CITY OF LEBANON.

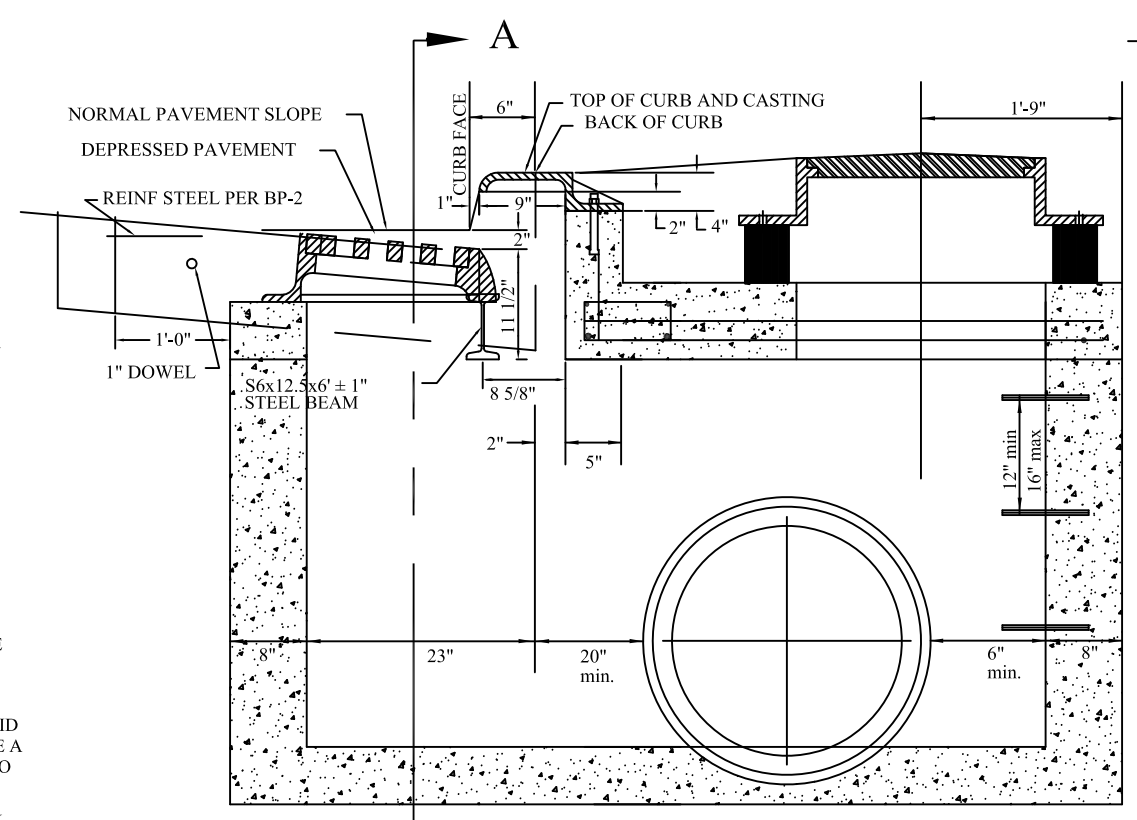

SECTION B-B

MODIFIED CB-3A CATCH BASIN

CITY OF LEBANON
DEPARTMENT OF
ENGINEERING

CITY OF LEBANON 1802

APPROVED BY:

STANDARD
DRAWING

DATE
7/25/2006
03/06/2007
2/07/2008
8/24/2009
5/17/2010

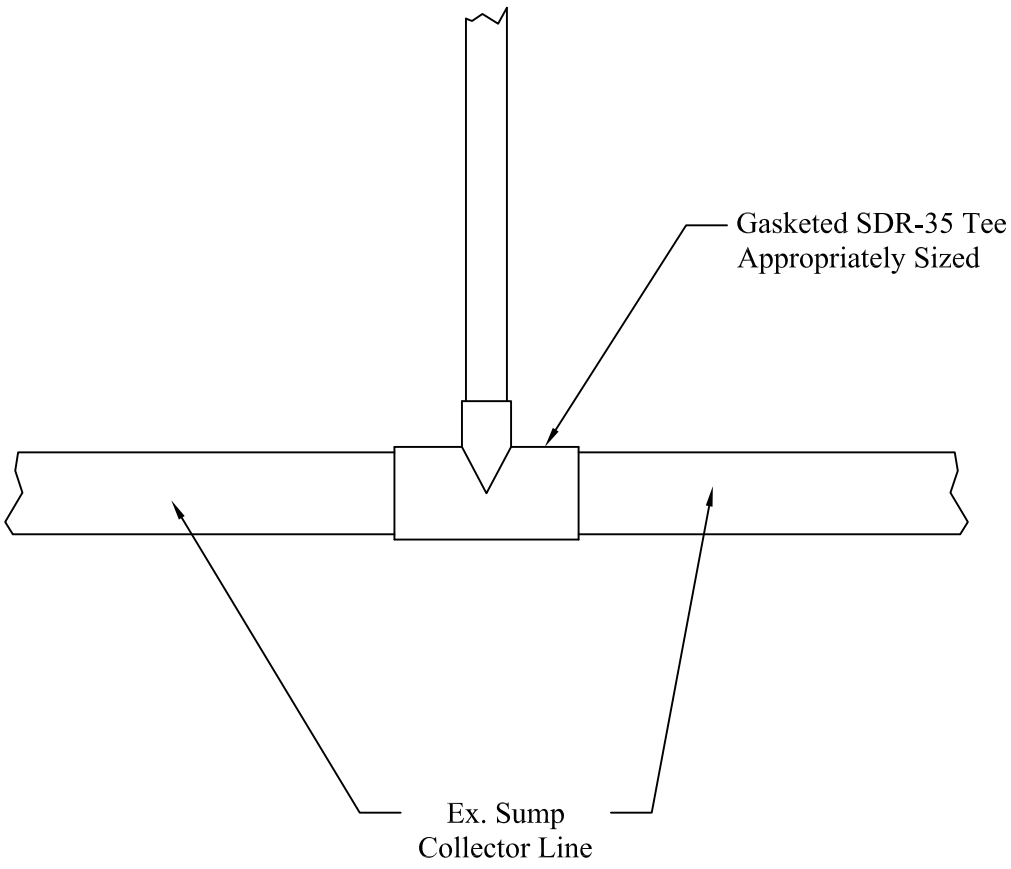

NOTES:

1. All connections shall be made with a gasketed SDR-35 tee. No drilled or saw cut connections shall be permitted.
2. All connections shall be inspected by the City of Lebanon prior to backfilling.
3. All sump drains and connections shall be bedded in a minimum of six inches (6") and backfilled with a minimum of 6" over the top of the pipe with #9's (grits).
4. All sump drain lines shall be constructed of gasketed SDR-35 pipe.

SUMP DRAIN CONNECTION DETAIL		
CITY OF LEBANON DEPARTMENT OF ENGINEERING	CITY OF LEBANON 1802	DATE 09/09/09
APPROVED BY:	STANDARD DRAWING	

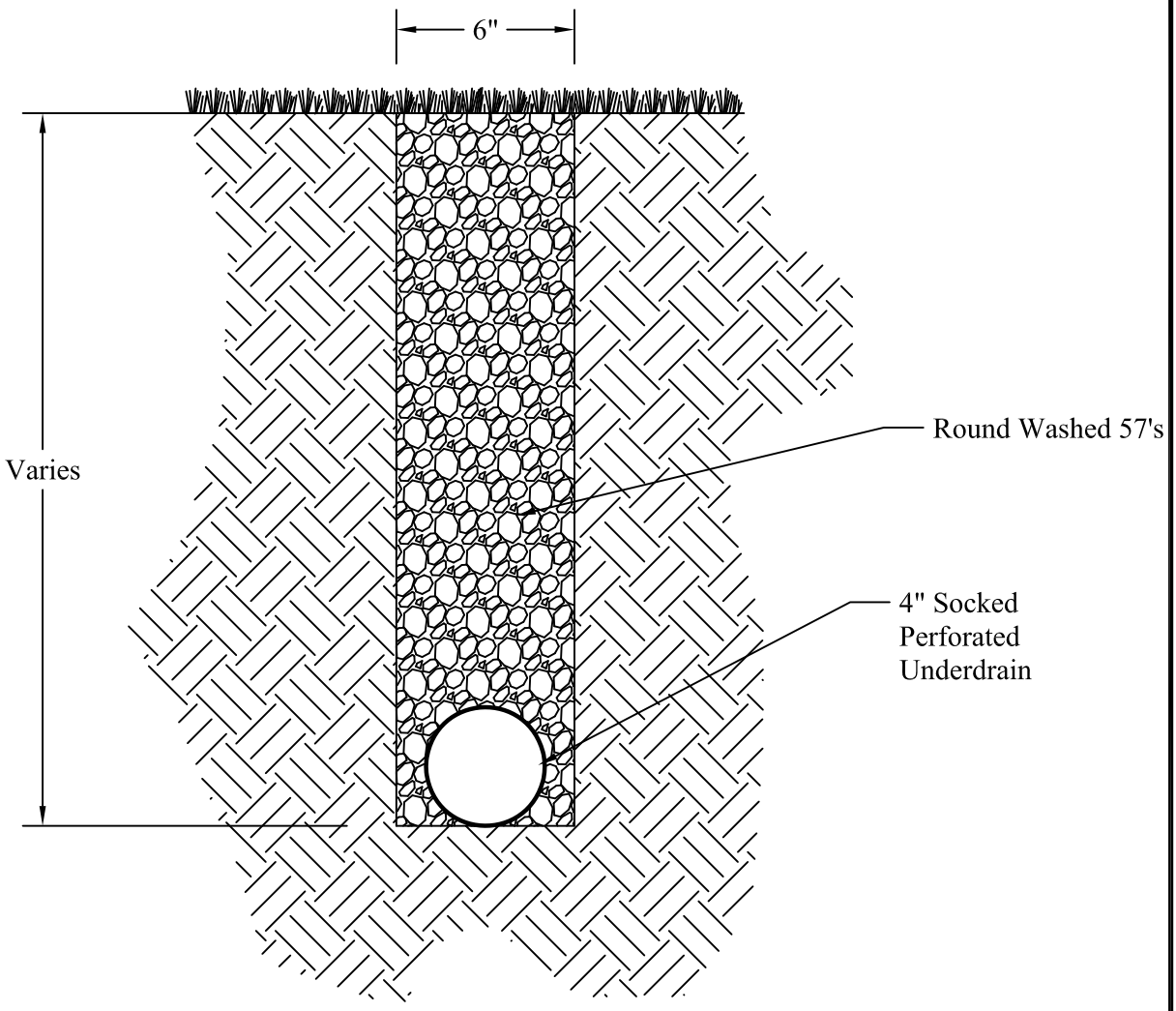

Notes:

- Connection of downstream end of perforated pipe shall be made to a catch basin or manhole. Connections to storm sewer pipes shall not be made without written permission of the City Engineer.
- Connections shall be made by coring through structure wall. Pipe shall be inserted through cored hole and and secured with non-shrink grout.
- If pipe is daylighted, the pipe end shall be capped with a slotted cap.

FRENCH DRAIN TRENCH DETAIL		
CITY OF LEBANON DEPARTMENT OF ENGINEERING	CITY OF LEBANON 1802	DATE 6/14/2011
APPROVED BY	STANDARD DRAWING	

Water Standard Drawings

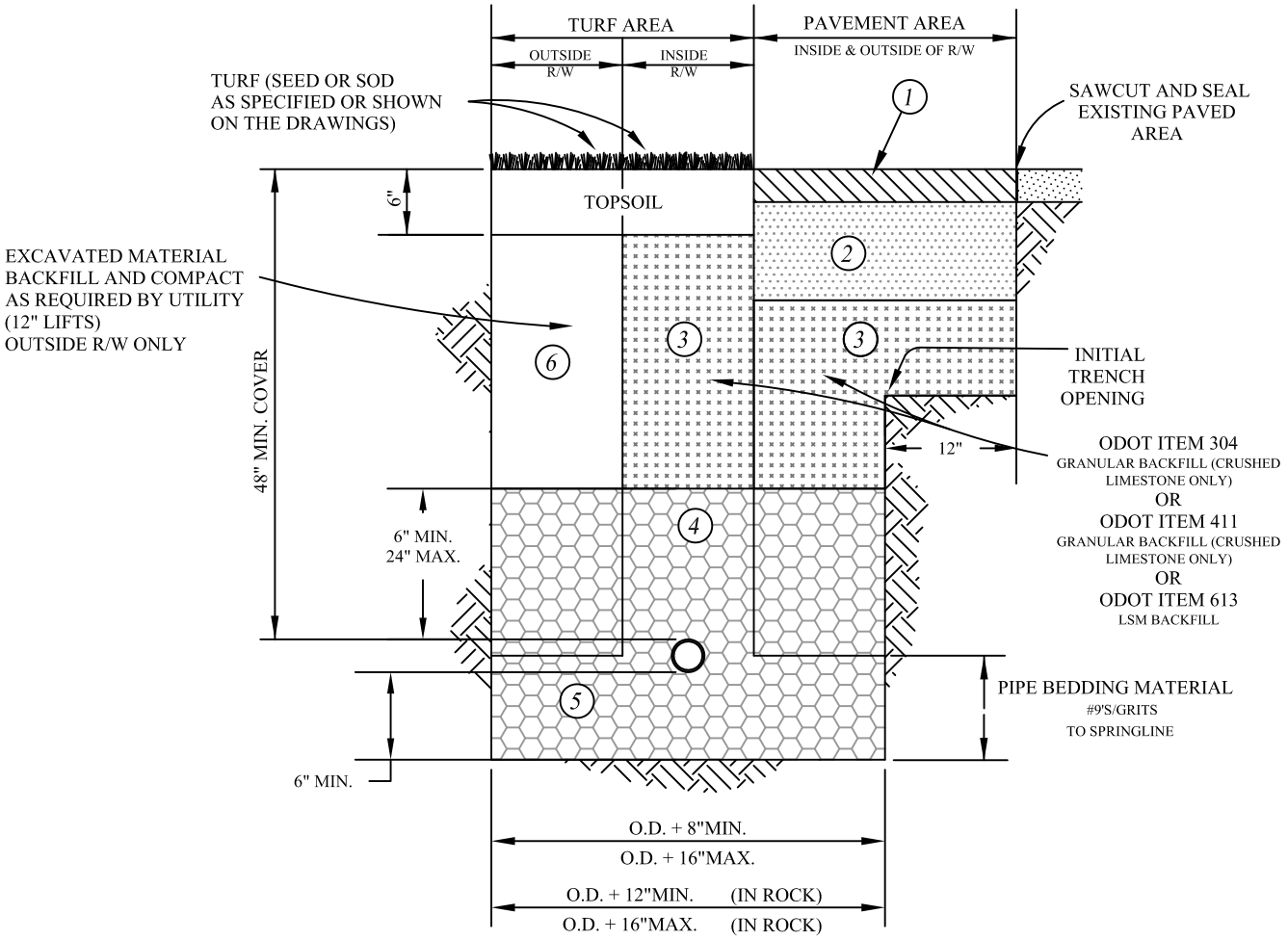

1. ODOT ITEM 448 - ASPHALT CONCRETE - INCLUDES INTERMEDIATE & SURFACE COURSES - REFER TO PAVEMENT DETAILS
2. ODOT ITEM 301 - BITUMINOUS AGGREGATE BASE (IN 2 COURSES) - REFER TO PAVEMENT DETAILS
3. ODOT ITEM 304 (CRUSHED LIMESTONE ONLY) OR ODOT ITEM 411 (CRUSHED LIMESTONE ONLY) GRANULAR BACKFILL COMPACTED TO 90 PERCENT OF MAXIMUM DENSITY IN MAXIMUM OF 8 INCH LIFTS OR ODOT ITEM 613 LSM - REFER TO PAVEMENT DETAILS
4. #9'S/GRITS GRANULAR BACKFILL (18" MINIMUM/24" MAXIMUM) ABOVE TOP OF PIPE MATERIAL IS TO BE PLACED AND COMPACTED TO 90 PERCENT OF MAXIMUM DENSITY IN 6 INCH MAXIMUM LIFTS
5. PIPE BEDDING & HAUNCHING MATERIAL - #9'S/GRITS MATERIAL TO BE PLACED AND COMPACTED TO 90 PERCENT OF MAXIMUM DENSITY IN 6 INCH MAXIMUM LIFTS
6. EXCAVATED MATERIAL BACKFILL AND COMPACTED TO A MINIMUM OF 98 PERCENT PROCTOR IN MAXIMUM OF 12" LIFTS OUTSIDE R/W ONLY

WATER SERVICE TRENCH DETAIL		
CITY OF LEBANON DEPARTMENT OF ENGINEERING	CITY OF LEBANON 1802	DATE 10/26/2011
APPROVED BY:	STANDARD DRAWING	

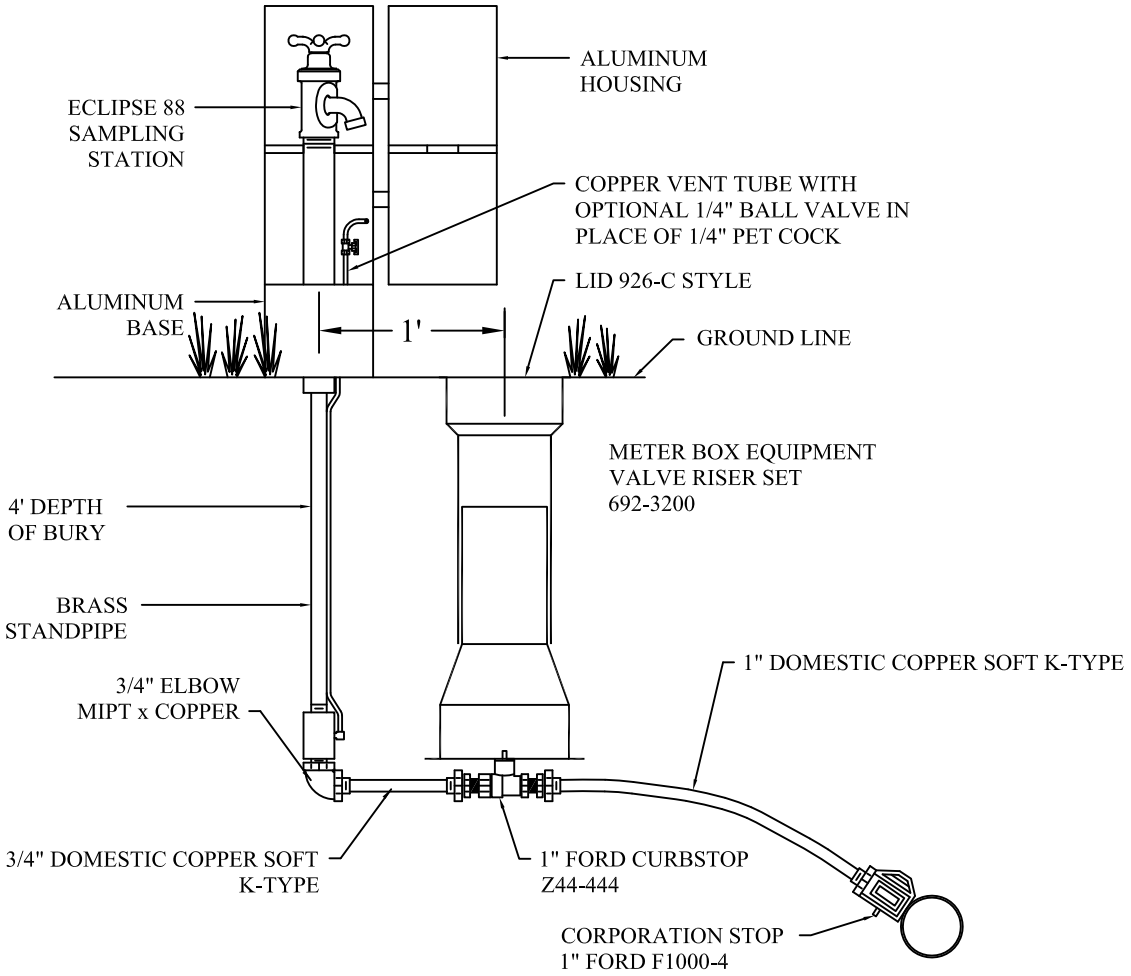

Sampling Stations shall have a 4' burydepth , with a 3/4" FIP inlet, and an unthreaded nozzle.

All stations shall be enclosed in a lockable, nonremovable, aluminum-cast housing.

When opened, the station shall require no key for operation, and the water will flow in an all brass waterway.

All working parts will also be of brass and be removable from above ground with no digging. Exterior piping shall be brass.

A copper vent tube will enable each station to be pumped free of standing water to prevent freezing and to minimize bacteria growth.

Sampling Station shall be Eclipse No. 88 manufactured by Kupferle Foundry, St. Louis, MO 63102.

WATER SAMPLING STATION DETAIL		
CITY OF LEBANON DEPARTMENT OF ENGINEERING	CITY OF LEBANON 1802	DATE 1/3/2007
APPROVED BY:	STANDARD DRAWING	

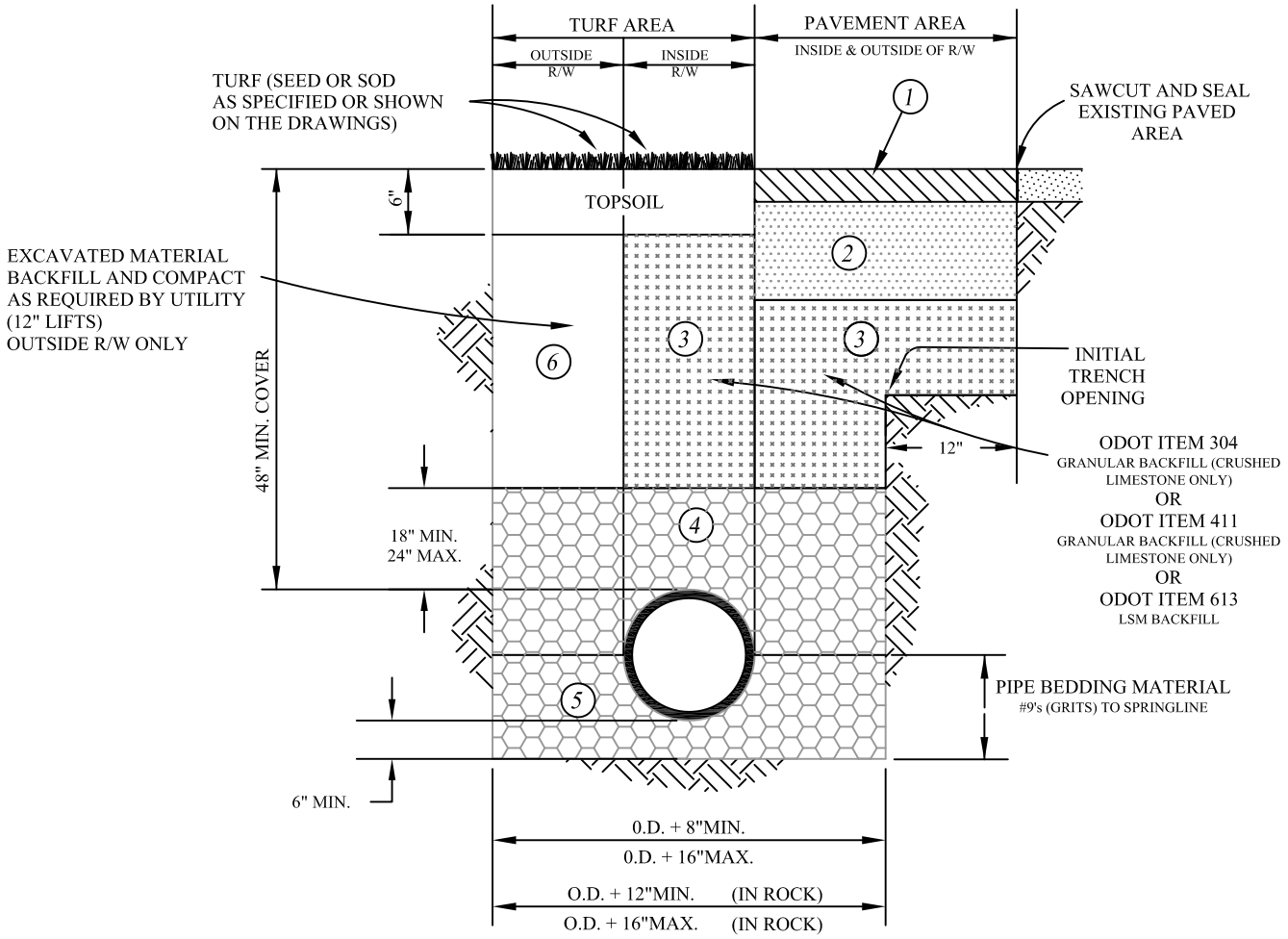

1. ODOT ITEM 448 - ASPHALT CONCRETE - INCLUDES INTERMEDIATE & SURFACE COURSES - REFER TO PAVEMENT DETAILS
2. ODOT ITEM 301 - BITUMINOUS AGGREGATE BASE (IN 2 COURSES) - REFER TO PAVEMENT DETAILS
3. ODOT ITEM 304 (CRUSHED LIMESTONE ONLY) OR ODOT ITEM 411 (CRUSHED LIMESTONE ONLY) GRANULAR BACKFILL COMPACTED TO 90 PERCENT OF MAXIMUM DENSITY IN MAXIMUM OF 8 INCH LIFTS OR ODOT ITEM 613 LSM - REFER TO PAVEMENT DETAILS
4. #9'S/GRITS GRANULAR BACKFILL (18" MINIMUM/24" MAXIMUM) ABOVE TOP OF PIPE MATERIAL IS TO BE PLACED AND COMPACTED TO 90 PERCENT OF MAXIMUM DENSITY IN 6 INCH MAXIMUM LIFTS
5. PIPE BEDDING & HAUNCHING MATERIAL - #9'S/GRITS MATERIAL TO BE PLACED AND COMPACTED TO 90 PERCENT OF MAXIMUM DENSITY IN 6 INCH MAXIMUM LIFTS
6. EXCAVATED MATERIAL BACKFILL AND COMPACTED TO A MINIMUM OF 98 PERCENT PROCTOR IN MAXIMUM OF 12" LIFTS OUTSIDE R/W ONLY

DUCTILE IRON WATER MAIN TRENCH DETAIL		
CITY OF LEBANON DEPARTMENT OF ENGINEERING	CITY OF LEBANON 1802	DATE 07/25/2006 03/06/2007 2/07/2008 9/19/2011
APPROVED BY:	STANDARD DRAWING	

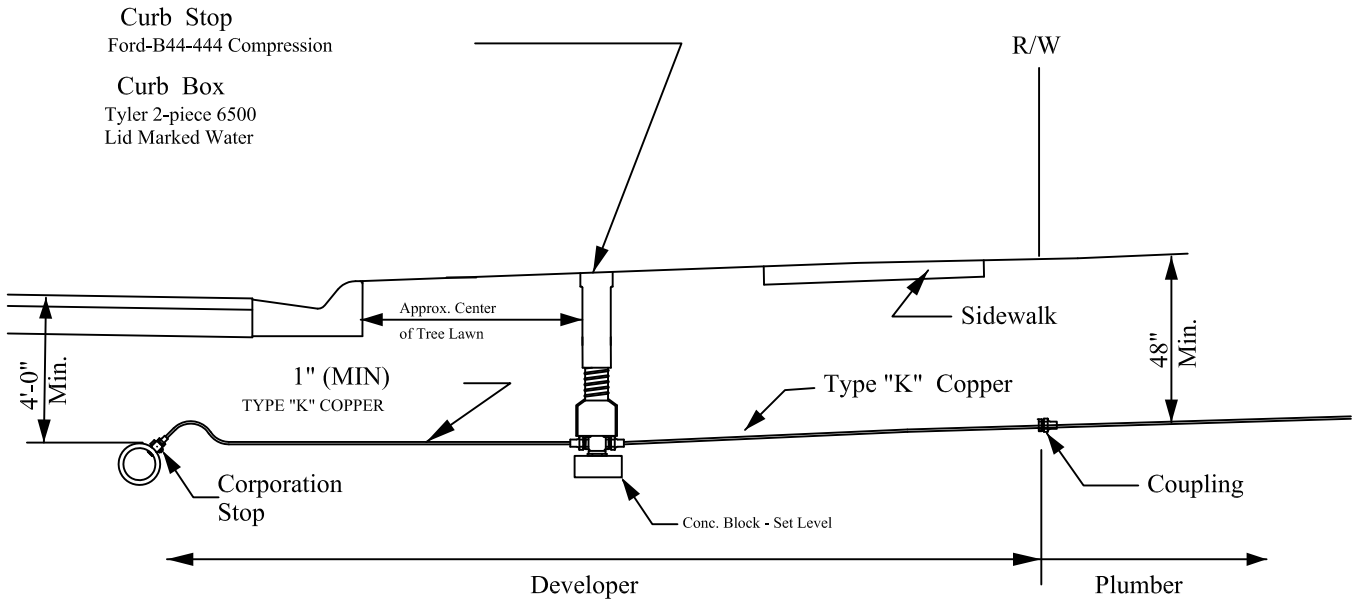

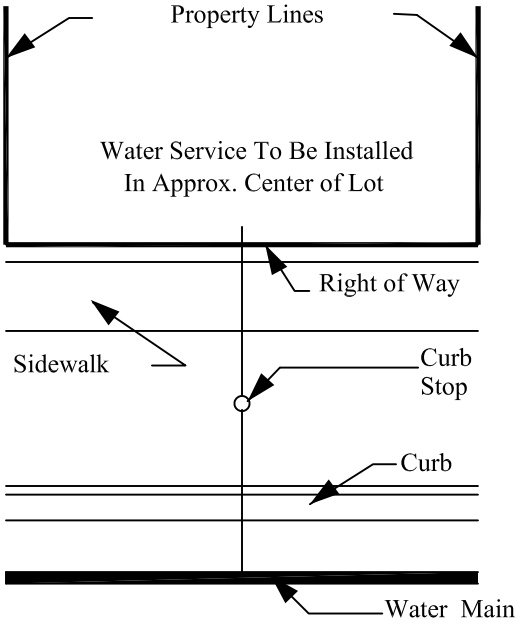

NOTES :

1. Service lines from the water main to the building shall be 48" below finished grade.
2. Service lines from the water main to the building shall be Type K copper.
3. Fittings shall not be permitted within the pavement
4. Water services shall enter the structure on the same side as the electric service. Although water service is shown in the center of the lot, it is the intent to keep all curb stops and boxes from underneath driveway aprons and driveways. Adjustments can be made where needed.
5. All connections for Type K Copper shall be compression fittings.

TYPICAL RESIDENTIAL WATER SERVICE		
CITY OF LEBANON DEPARTMENT OF ENGINEERING	CITY OF LEBANON 1802	DATE 7/25/2006
APPROVED BY:	STANDARD DRAWING	

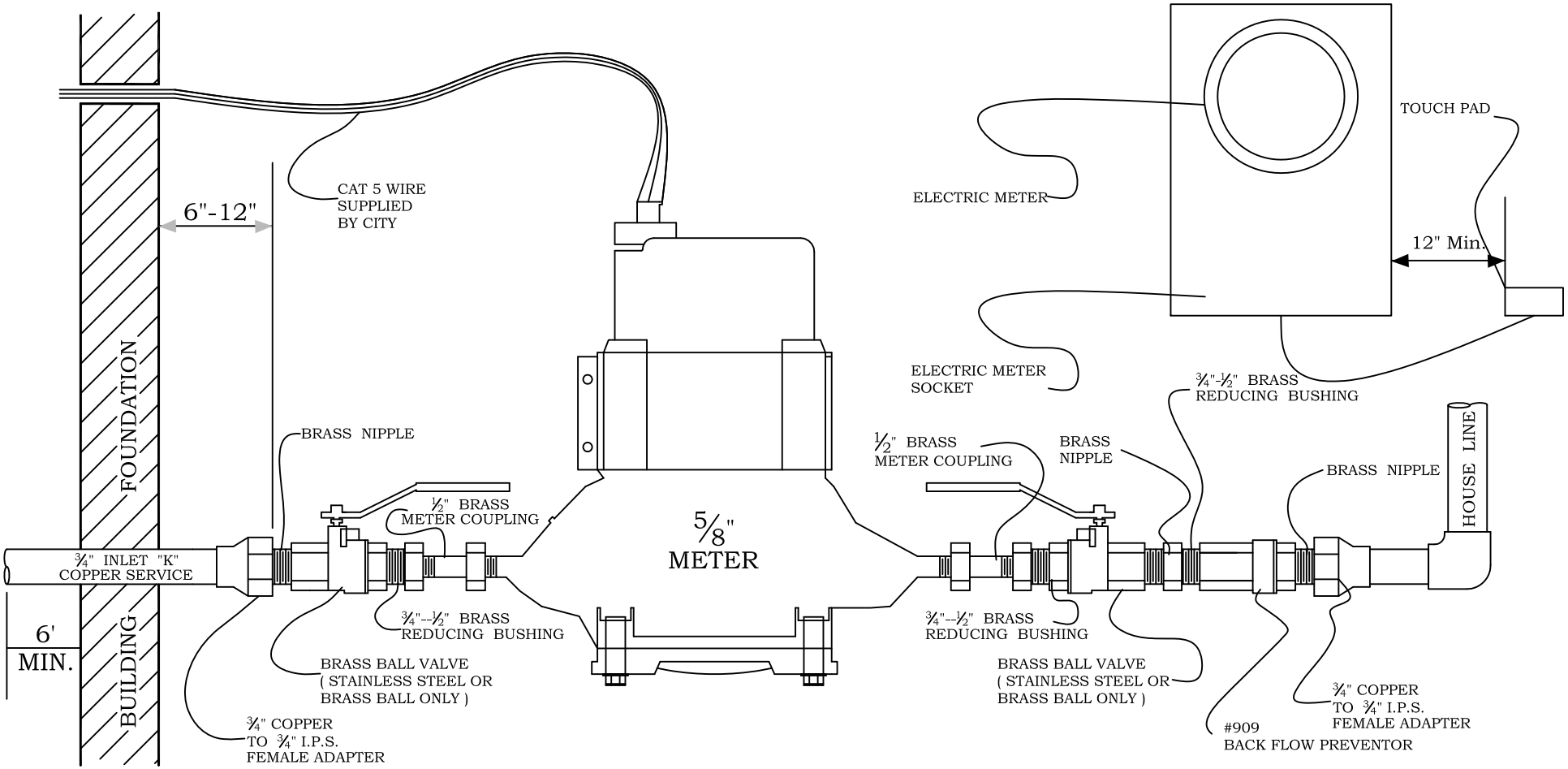

NOTES

1) The meter shall be set between 12" -- 36" above floor.
2) Brass ball valves to be 150 Lbs. S. W. P. with 3" handles, stainless steel or brass ball, Buna-N-Seats, conforming to ASTM B62, or approved equal.
3) Laying length of 5/8" Meter is 7 ½".
4) Meter must be installed and sealed by Water Works personnel.
5) Any electrical ground wire on the service line must be located between inlet valve and street.
6) It is required to use this setting when an inside meter reduction is approved, or branch replacement occurs, provided ball valves (as specified) are used.
7) The remote wire shall be furnished by Lebanon Water Works. Builder shall not connect wire to framing members or foundation.
8) Wall mounted touch pad to be installed 1' from electric meter socket. Top of touch pad shall be flush with bottom of meter socket

STANDARD 5/8" REMOTE EMR INSIDE METER COUPLING SETTING DETAILS

CITY OF LEBANON
DEPARTMENT OF
ENGINEERING

CITY OF LEBANON 1802

DATE
7/25/2006

APPROVED BY

STANDARD
DRAWING

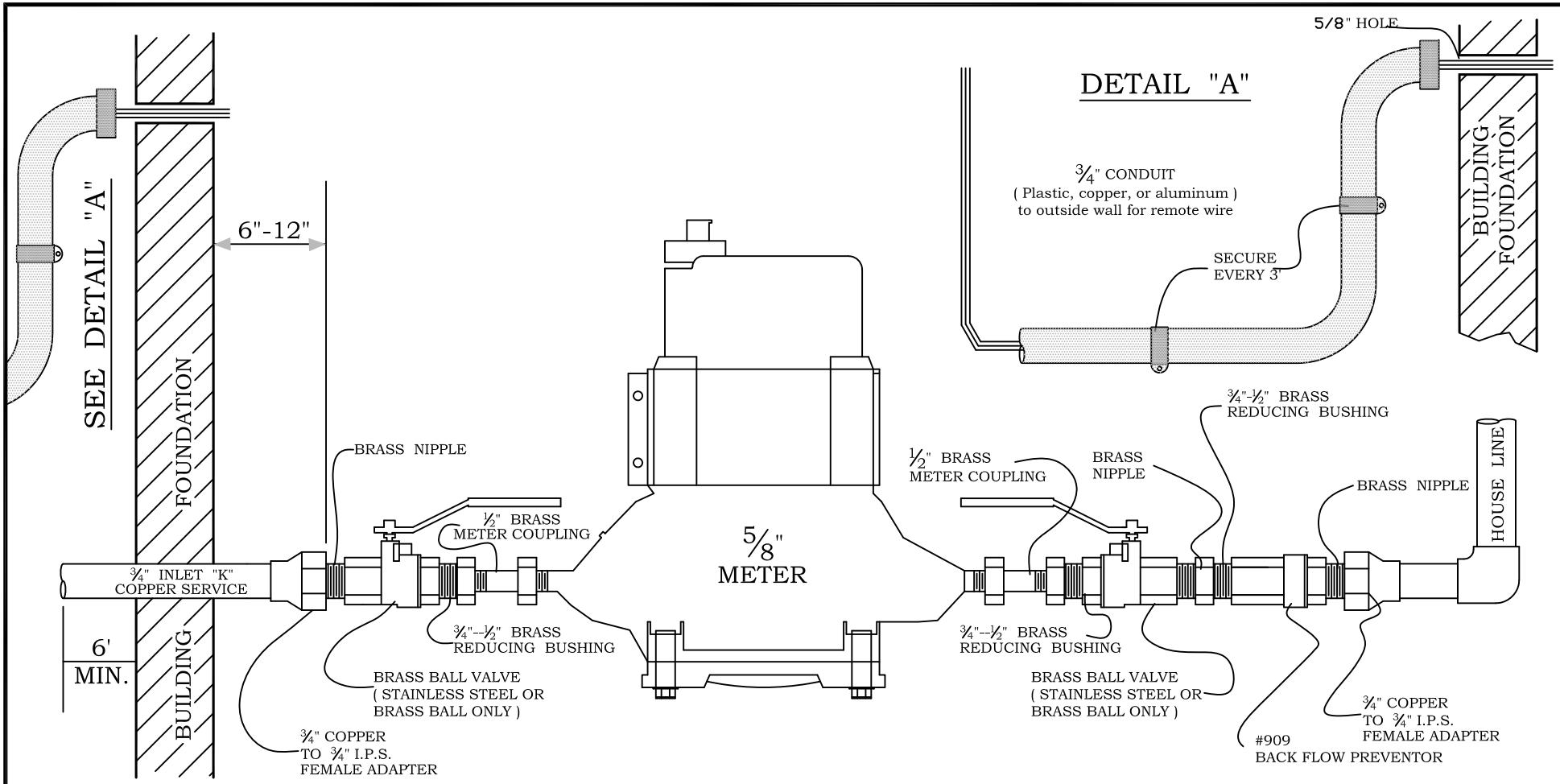

NOTES

1) The meter shall be set between 12" -- 36" above floor.
2) Brass ball valves to be 150 Lbs. S. W. P. with 3" handles, stainless steel or brass ball, Buna-N-Seats, conforming to ASTM B62, or approved equal.
3) Laying length of 5/8" Meter is 7 1/2".
4) Meter must be sealed by Water Works personnel.
5) Any electrical ground wire on the service line must be located between inlet valve and street.
6) It is required to use this setting when an inside meter reduction is approved, or branch replacement occurs, provided ball valves (as specified) are used.
7) The remote wire shall be furnished by Lebanon Water Works. The wire shall extend 2' beyond the conduit on each side.
8) Conduit shall end within 6" of meter and outside wall.
9) The ¾" conduit shall be installed on the same outside wall as the cable service.

STANDARD 5/8" REMOTE EMR INSIDE METER COUPLING SETTING DETAILS

CITY OF LEBANON DEPARTMENT OF ENGINEERING

CITY OF LEBANON 1802

DATE 7/25/2006

APPROVED BY

STANDARD DRAWING

Water Service Standard Items						
Water Meter Size	Curb Stop	Corp Stop	Ball Valve	Meter Length	Meter Outlet	PET Insert
5/8" - 3/4"	B44-444	FB-10004	B43-444W	7-3/4"	C-38-23-5	51
1"	B44-444	FB-40004	B43-444W	11"	C38-442-5	52
1-1/2"	B44-666	FB-10006	BF43-666W	13"	CF31-66	54
2"	B44-777	FB-10007	BF43-777W	17"	CF31-77	55
Note: Minimum Water service size is 1" from water main to curb stop.						

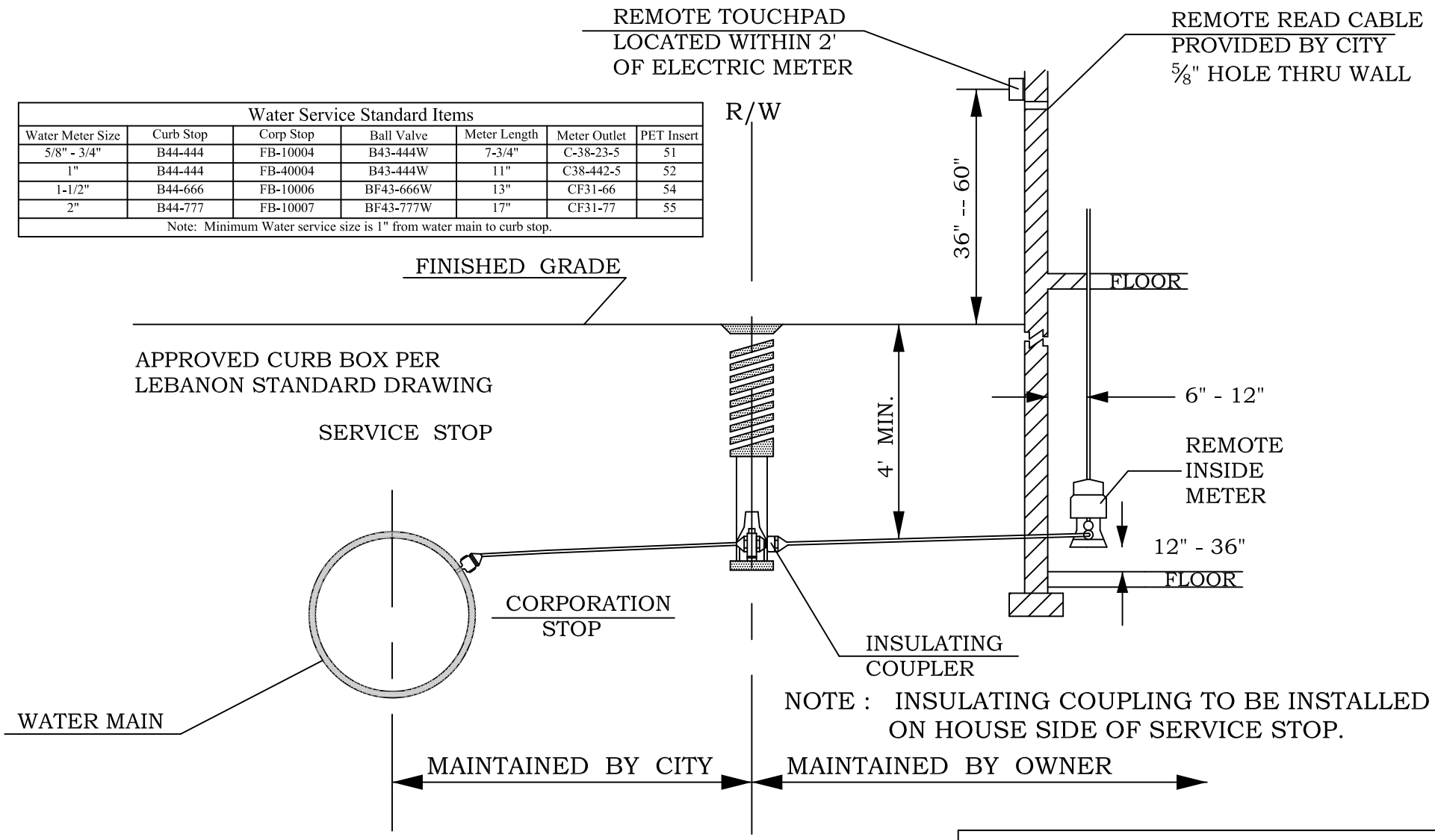

NOTE : INSULATING COUPLING TO BE INSTALLED ON HOUSE SIDE OF SERVICE STOP.

NOTES : 1. NO ELECTRIC GROUND SHALL BE CONNECTED TO THE WATER SERVICE.
THERE SHALL BE 24" OF EXCESS CABLE AT THE METER AND THERE SHALL BE 60" OF CABLE AT THE FOUNDATION, ABOVE GRADE.
ALL CONNECTIONS TO THE REMOTE READ TOUCH-PAD SHALL BE MADE BY THE BUILDER.

3/4" & 1" SERVICE BRANCH WITH REMOTE METER SETTING

CITY OF LEBANON
DEPARTMENT OF
ENGINEERING

CITY OF LEBANON 1802

DATE
7/25/2006
7/26/2010

APPROVED BY

STANDARD DRAWING

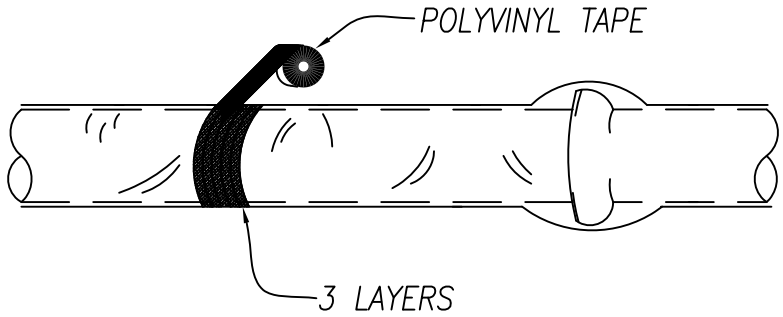

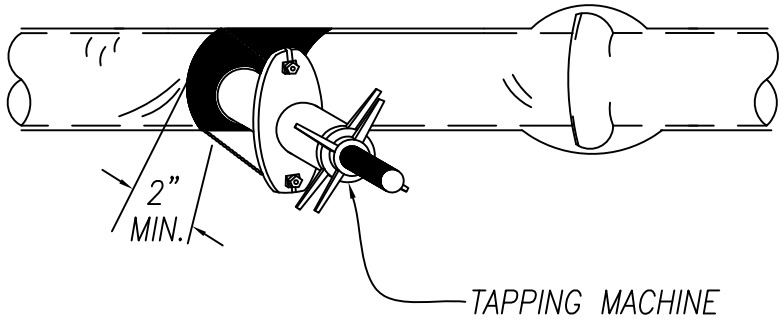

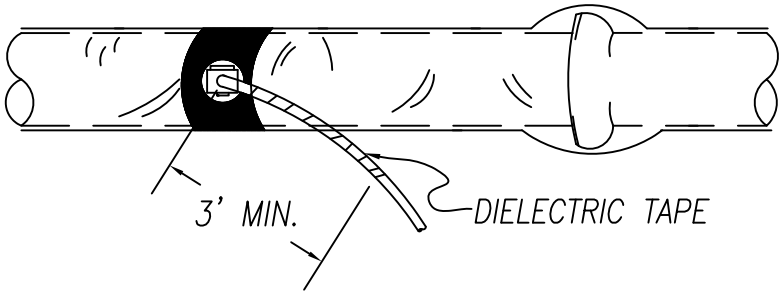

OPENINGS FOR BRANCHES, SERVICE TAPS, BLOW-OFFS, AIR VALVES, AND SIMULAR APPURTENANCES SHALL BE MADE BY:

1.) WRAPPING (3) THREE LAYERS OF POLYVINYL – COMPATIBLE ADHESIVE TAPE COMPLETELY AROUND THE PIPE TO COVER THE AREA WHERE THE TAPPING MACHINE AND CHAIN WILL BE MOUNTED, EXTENDING A MINIMUM OF 2" BEYOND THE MOUNTING SURFACE.

2.) MOUNT THE TAPPING MACHINE ON THE PIPE AREA COVERED BY THE TAPE AND MAKE THE TAP AND INSTALL THE FERRULE DIRECTLY THROUGH THE TAPE AND POLYETHYLENE.

3.) INSPECT THE ENTIRE CIRCUMFERENTIAL AREA FOR DAMAGE AND MAKE ANY NECESSARY REPAIRS WITH TAPE.

4.) ON HOUSE SERVICES, TO MINIMIZE THE POSSIBILITY OF DISSIMILAR METAL CORROSION AT SERVICE CONNECTIONS, WRAP THE FERRULE AND A MINIMUM CLEAR DISTANCE OF THREE FEET OF THE COPPER SERVICE WITH POLYETHYLENE OR A SUITABLE DIELECTRIC TAPE.

SERVICE TAPS THROUGH POLYETHYLENE WRAP		
CITY OF LEBANON DEPARTMENT OF ENGINEERING	CITY OF LEBANON 1802	DATE 2/6/2014
APPROVED BY	STANDARD DRAWING	

TAPE MATERIAL
POLYETHYLENE TAPE 1-1/2" WIDE AS RECOMMENDED BY THE FILM MANUFACTURER.

MATERIAL SPECIFICATIONS
8 MIL POLYETHYLENE SHALL CONFORM TO ANSI/AWWA SPECIFICATION C105/A21.5

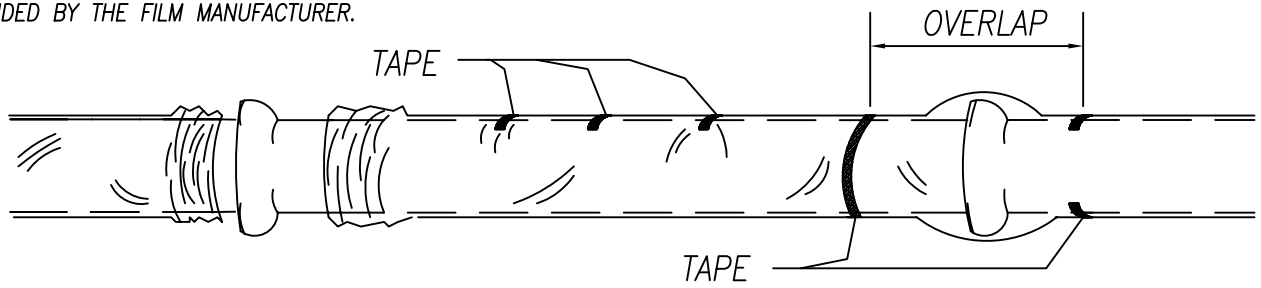

THE FOLLOWING METHOD ILLUSTRATES THE PROCEDURE FOR APPLYING POLYETHYLENE:

CUT POLYETHYLENE TUBE TO A LENGTH APPROXIMATELY TWO FEET LONGER THAN THE LENGTH OF THE PIPE SECTION, SLIP THE TUBE AROUND THE PIPE, CENTERING IT TO PROVIDE A ONE-FOOT OVERLAP ON EACH ADJACENT PIPE SECTION, AND BUNCHING IT ACCORDION FASHION LENGTHWISE UNTIL IT CLEARS THE PIPE ENDS.

LOWER THE PIPE INTO THE TRENCH AND MAKE THE PIPE JOINT WITH THE PRECEDING SECTION OF PIPE. A SHALLOW BELL HOLE MUST BE MADE AT THE JOINTS TO FACILITATE INSTALLATION OF THE POLYETHYLENE TUBE.

AFTER ASSEMBLING THE PIPE JOINT, MAKE THE OVERLAP OF THE POLYETHYLENE TUBE, PULL THE BUNCHED POLYETHYLENE FROM THE PRECEDING LENGTH OF PIPE, SLIP IT OVER THE END OF THE NEW LENGTH OF PIPE AND SECURE IT IN PLACE. THEN SLIP THE END OF THE POLYETHYLENE FROM THE NEW PIPE SECTION OVER THE END OF THE PRECEDING LENGTH OF PIPE, SECURE THE OVERLAP IN PLACE, TAKE UP THE SLACK WIDTH TO MAKE IT SNUG, BUT NOT TO TIGHT, FIT ALONG THIS BARREL OF PIPE, SECURING THE FOLD AT QUARTER POINTS.

REPAIR ANY RIPS, PUNCTURES, OR OTHER DAMAGE TO THE POLYETHYLENE WITH ADHESIVE TAPE OR WITH A SHORT LENGTH OF THE POLYETHYLENE TUBE CUT OPEN, WRAPPED AROUND THE PIPE, AND SECURED IN PLACE. PROCEED WITH INSTALLATION OF THE NEXT SECTION OF PIPE IN THE SAME MANNER.

PIPE-SHAPED APPURTENANCES:
BENDS, REDUCERS, OFFSETS AND OTHER PIPE-SHAPED APPURTENANCES SHALL BE COVERED WITH POLYETHYLENE IN THE SAME MANNER AS THE PIPE.

JUNCTIONS BETWEEN WRAPPED AND UNWRAPPED PIPE:
WHERE POLYETHYLENE WRAPPED PIPE JOINS A PIPE WHICH IS NOT WRAPPED, EXTEND THE POLYETHYLENE TUBE TO COVER THE UNWRAPPED PIPE A DISTANCE OF AT LEAST TWO FEET. SECURE THE END WITH CIRCUMFERENTIAL TURNS OF TAPE.

ODD SHAPED APPURTENANCES:
VALVES, TEES, CROSSES AND OTHER ODD-SHAPED PIECES WHICH CANNOT BE WRAPPED PRACTICALLY IN A TUBE SHALL BE WRAPPED WITH A FLAT SHEET OR SPLIT LENGTH OF POLYETHYLENE TUBE. THE SHEET SHALL BE PASSED UNDER THE APPURTENANCE AND BROUGHT UP AROUND THE BODY. SEAMS SHALL BE MADE BY BRINGING THE EDGES TOGETHER, FOLDING OVER TWICE, AND TAPPING DOWN. SLACK WIDTH AND OVERLAPS AT JOINTS SHALL BE HANDLED AS DESCRIBED ABOVE. TAPE POLYETHYLENE SECURELY IN PLACE AT VALVE STEM AND OTHER PENETRATIONS.

BACKFILL FOR POLYETHYLENE WRAPPED PIPE:
BACKFILL MATERIAL SHALL BE THE SAME AS SPECIFIED FOR PIPE WITHOUT POLYETHYLENE WRAPPING. SPECIAL CARE SHOULD BE TAKEN TO PREVENT DAMAGE TO THE POLYETHYLENE WRAPPING WHEN PLACING BACKFILL, BACKFILL MATERIAL SHOULD BE FREE FROM CINDERS, REFUSE, BOULDERS, ROCKS, STONES OR OTHER MATERIAL THAT COULD DAMAGE POLYETHYLENE.

TUBE SIZE REQUIRED							
PIPE DIAMETER	4"	6"	8"	10"	12"	16"	20"
MIN. FLAT TUBE WIDTH (INCHES)	14	16	20	24	27	34	41

POLYETHYLENE PIPE WRAP

CITY OF LEBANON
DEPARTMENT OF
ENGINEERING

CITY OF LEBANON 1802

DATE
7/25/2006
7/26/2010
2/6/2014

APPROVED BY

STANDARD DRAWING

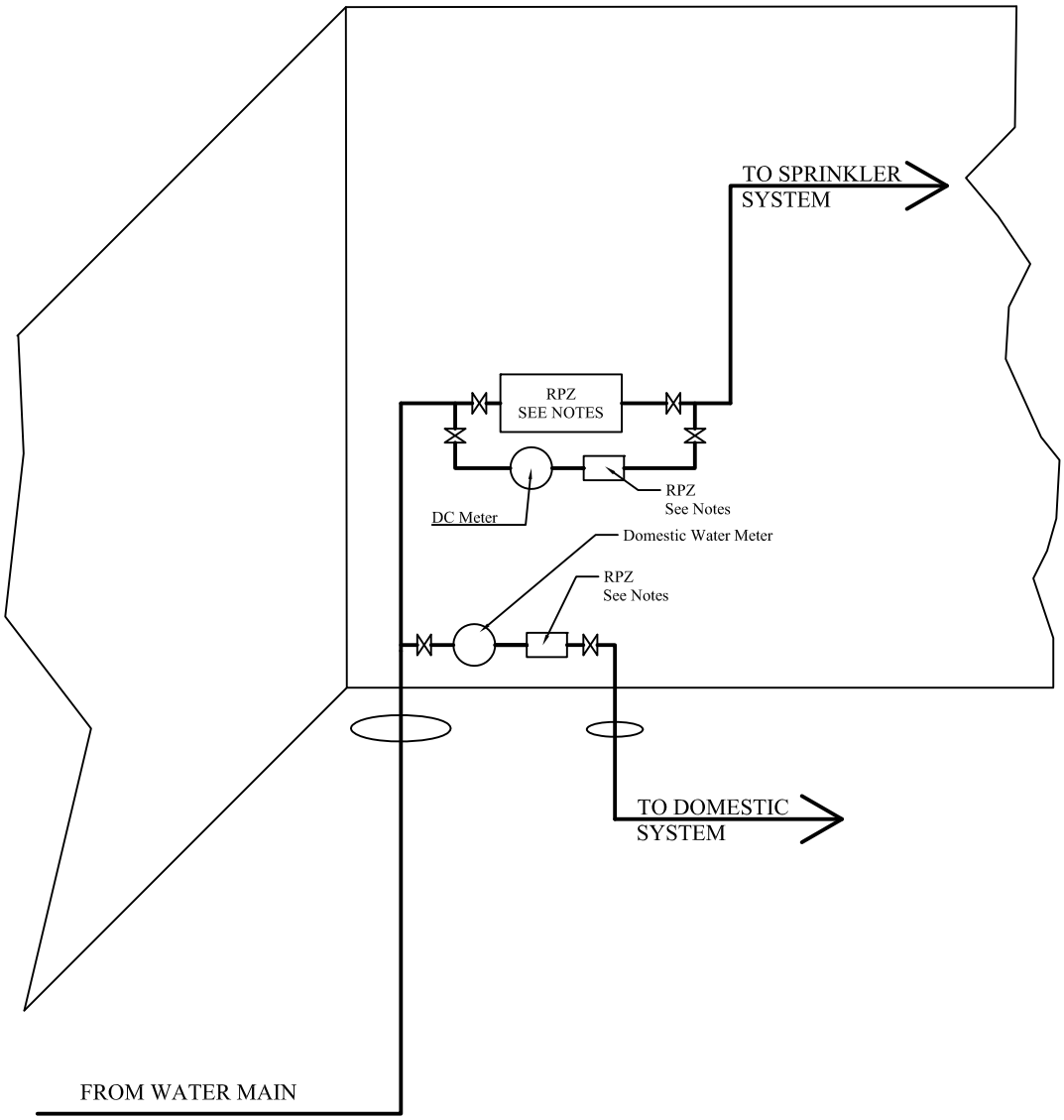

NOTES :

1. Back flow Preventer:
   -Fire Line with chemical additives in Fire System - ASSE 1013
   -Fire Line without chemical additives in Fire System - ASSE 1015
   -Domestic Line - ASSE 1013
2. RPZ shall be Watts 009 or Watts 909, or equal approved by the City of Lebanon.
3. All fire lines shall be Class 53 Ductile Iron regardless of size. All domestic water lines less than three inches (< 3") in diameter shall be Type K copper. All domestic lines three inches or larger (≥ 3") shall be Class 53 Ductile Iron.
4. Domestic water meter and domestic backflow preventer shall be placed inside of the building.
5. The exterior fire riser connection shall be provided with a 5" Storz fitting.
6. RPZ shall be installed a minimum of 12" above the maximum flood level.
7. All backflow preventers shall be installed horizontally unless specifically designed for vertical installation.

INTERIOR DOMESTIC/FIRE LINE SPILT DETAIL

CITY OF LEBANON DEPARTMENT OF ENGINEERING

CITY OF LEBANON 1802

DATE 10/08/2009

APPROVED BY:

STANDARD DRAWING

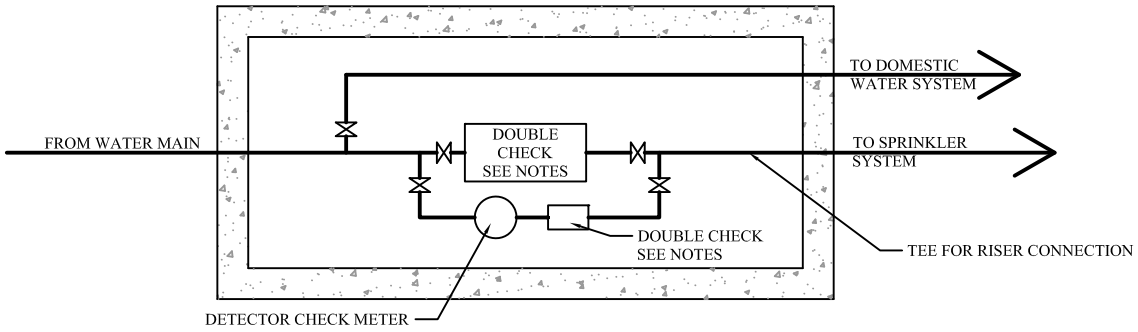

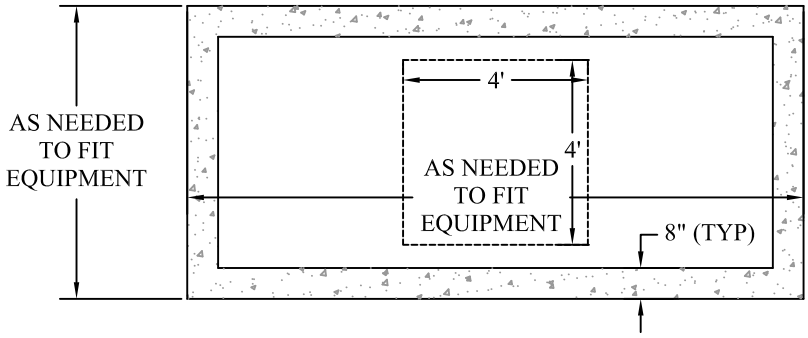

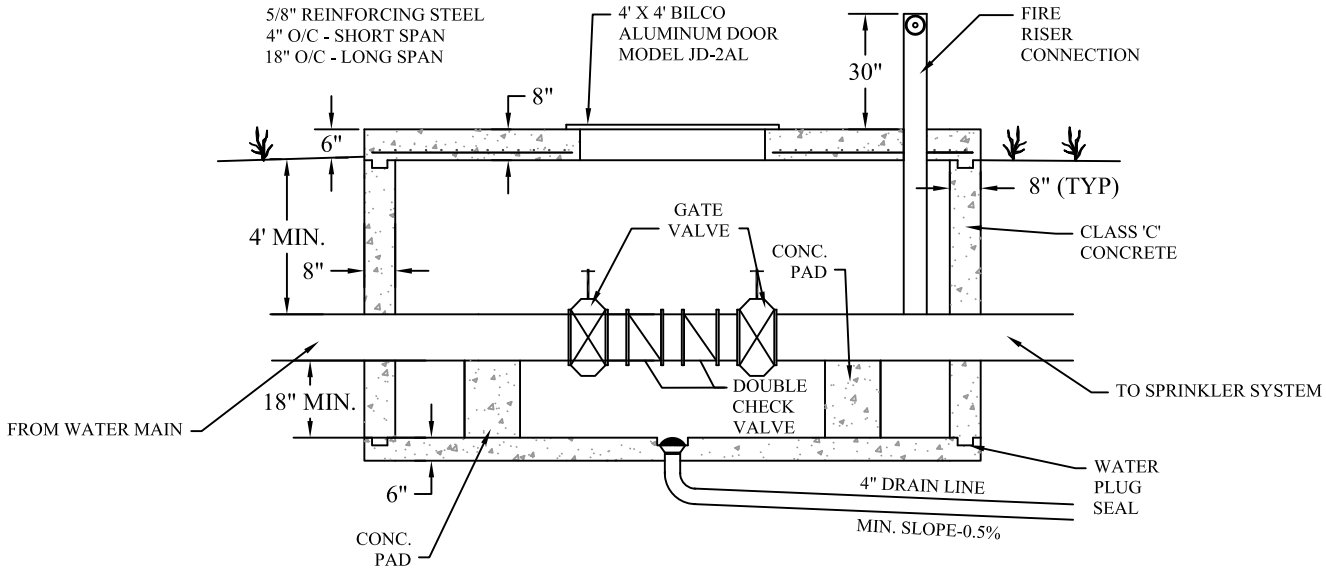

NOTES :

1. The exterior sides of pit walls shall be waterproofed with two coats of: Thoroseal, U.S.S. Chemical Tarsmatic N0. 102, Koppers Bitumastuic Super Service Seal Black, Damchex, Amercoat No. 78, or approved equal.
2. Each pit shall be drained by means of a 4" Drain leading to a storm sewer. The pit floor shall be sloped to a floor drain placed in the center of the pit. The floor drain casting shall have a 4" outlet and a raised or beehive dome grate similar to Wade No. 1634, Josam No. 7324-N, or an approved equal.
3. Back flow Preventer:
   -Fire Line without chemical additives in Fire System - ASSE 1015
   -Fire line with chemical additives in Fire System - ASSE 1013 (shall be installed inside of building - not permitted in pit)
4. Double Check Valve must be E.P.A. Approved.
5. All fire lines shall be Class 53 Ductile Iron regardless of size. All domestic water lines less than three inches (< 3") in diameter shall be Type K copper. All domestic lines three inches or larger (≥ 3") shall be Class 53 Ductile Iron.
6. An OSHA approved ladder shall be provided as part of fire meter pit for safe ingress/egress.
7. Domestic water meter and domestic backflow preventer shall be placed inside of the building. Domestic line shall have an ASSE 1013 backflow preventer.
8. The fire riser connection shall be provided with a 5" Storz fitting.

EXTERIOR DOMESTIC/FIRE LINE SPLIT DETAIL		
CITY OF LEBANON DEPARTMENT OF ENGINEERING	CITY OF LEBANON 1802	DATE 10/08/2009
APPROVED BY	STANDARD DRAWING	

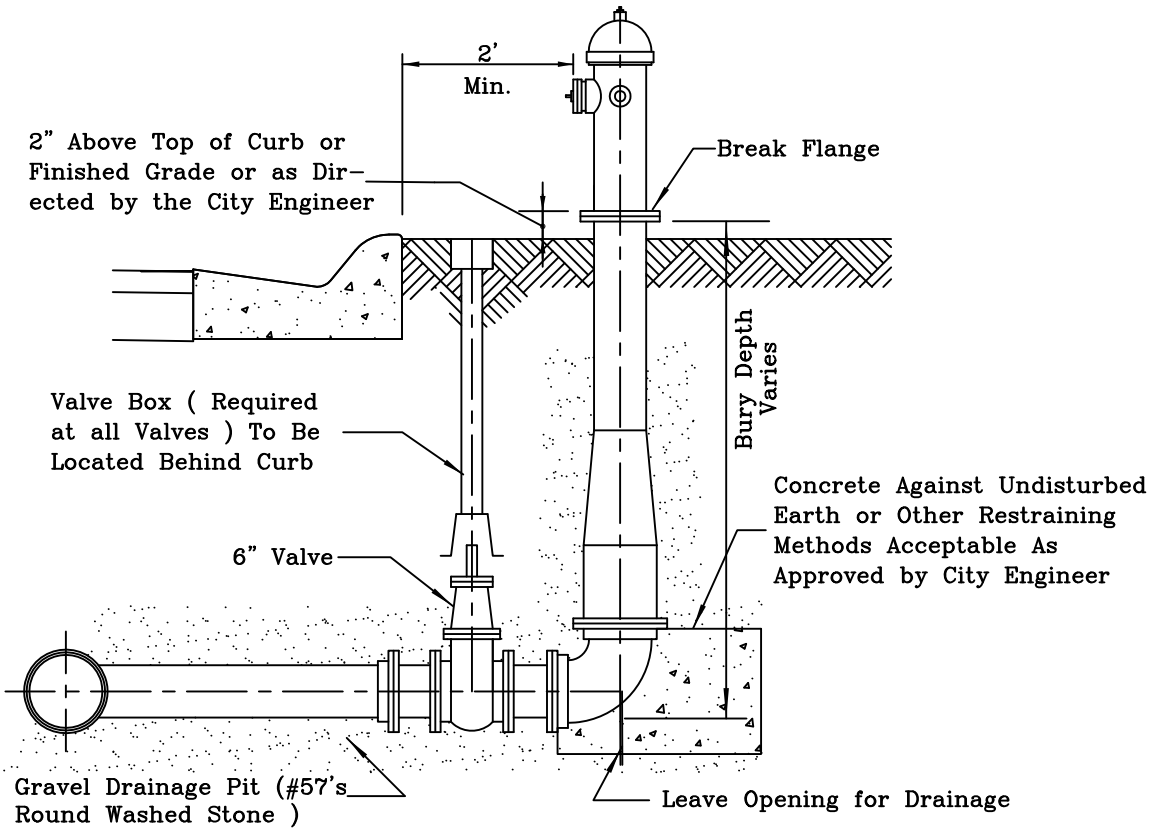

FIRE HYDRANT DETAILS

1.	Manufacturer	American Darling
2.	Model	B-62-B
3.	Dia. Main Valve Opening	5 1/4"
4.	Pumper Connection	5" I. D. with Storz Fitting
5.	Hose Connection	Two 2 1/2"
6.	Thread Typ	National Standard - No Thread Exposed to Water
7.	Shape-Caps & Operating Nut	Pentagon
6.	Dim. Operating Nuts	1 3/8"
7.	Direction of Opening	Right (Clockwise)
8.	Color to be Painted	White with Green Caps
9.	Valve Seat	Bronze
10.	Barrel	Two piece-Break Away Flange
11.	Top	Dry
12.	Bearing	Anti-Friction Thrust Bearing
13.	Spacing Requirements	250 Feet Commercial/Industrial (MAX) 400 Feet Residential (MAX)

PAINT

1.	Primer	PPG Multiprime 35 97-680 Medium White
2.	Enamel	PPG Pitthane 35 Gloss Urethane Enamel
3.	Colors	Green: Federal Spec 14062 White: Federal Spec 17875

FIRE HYDRANT DETAIL

CITY OF LEBANON
DEPARTMENT OF
ENGINEERING

CITY OF LEBANON 1802

DATE
7/25/2006
03/06/2007

APPROVED BY:

STANDARD
DRAWING

WATTS 3/4" or 1" BACKFLOW DEVICE MODEL #909 or APPROVED EQUAL TO BE INSTALLED A MAXIMUM OF 6" FROM IRRIGATION/DEDUCT METER BETWEEN METER AND USE.

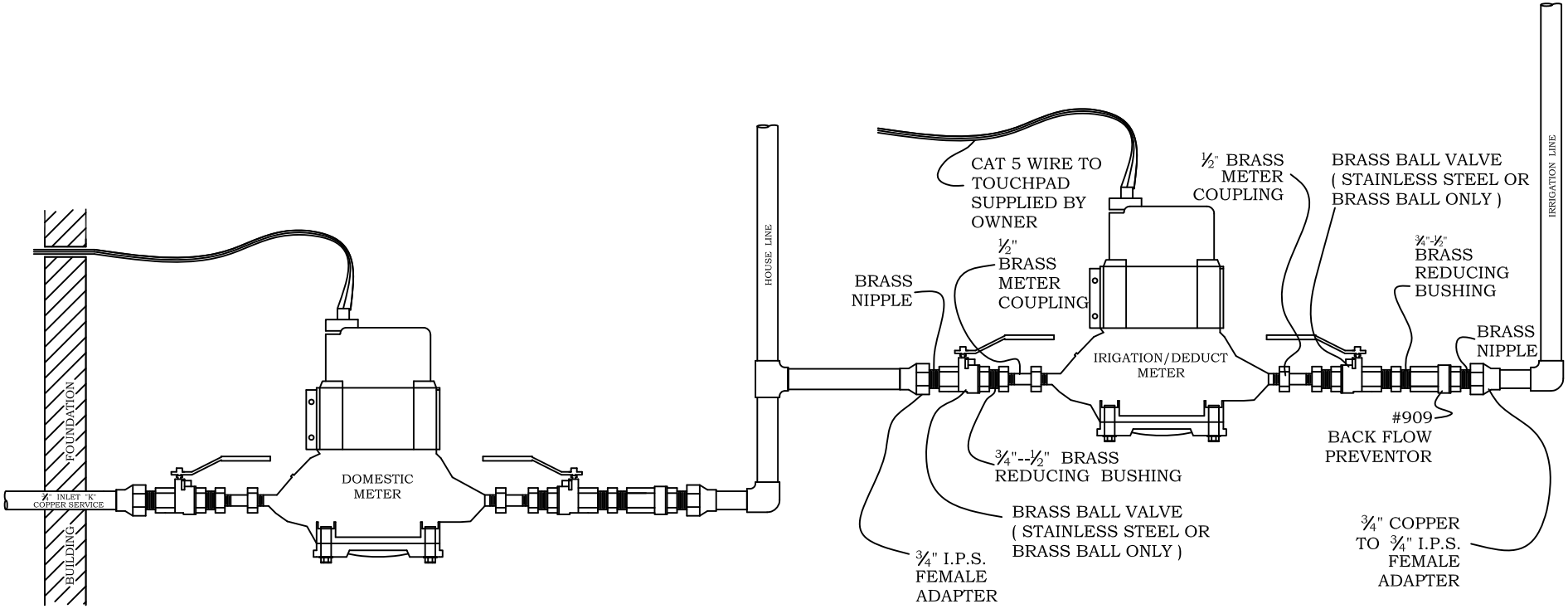

NO WATER FROM AN IRRIGATION/DEDUCT METER SHALL BE ALLOWED TO ENTER THE SANITARY SEWER SYSTEM

INSIDE IRRIGATION/DEDUCT METER DETAILS		
CITY OF LEBANON DEPARTMENT OF ENGINEERING	CITY OF LEBANON 1802	DATE 7/25/2006
APPROVED BY:	STANDARD DRAWING	

NOTES:
1) INLET AND OUTLET RISERS SHALL BE TYPE "K" COPPER.
2) CITY OF LEBANON TO PROVIDE IRRIGATION METER, PIT, INTERNAL PIT FITTINGS.
3) CONTRACTOR TO INSTALL METER AND PIT.

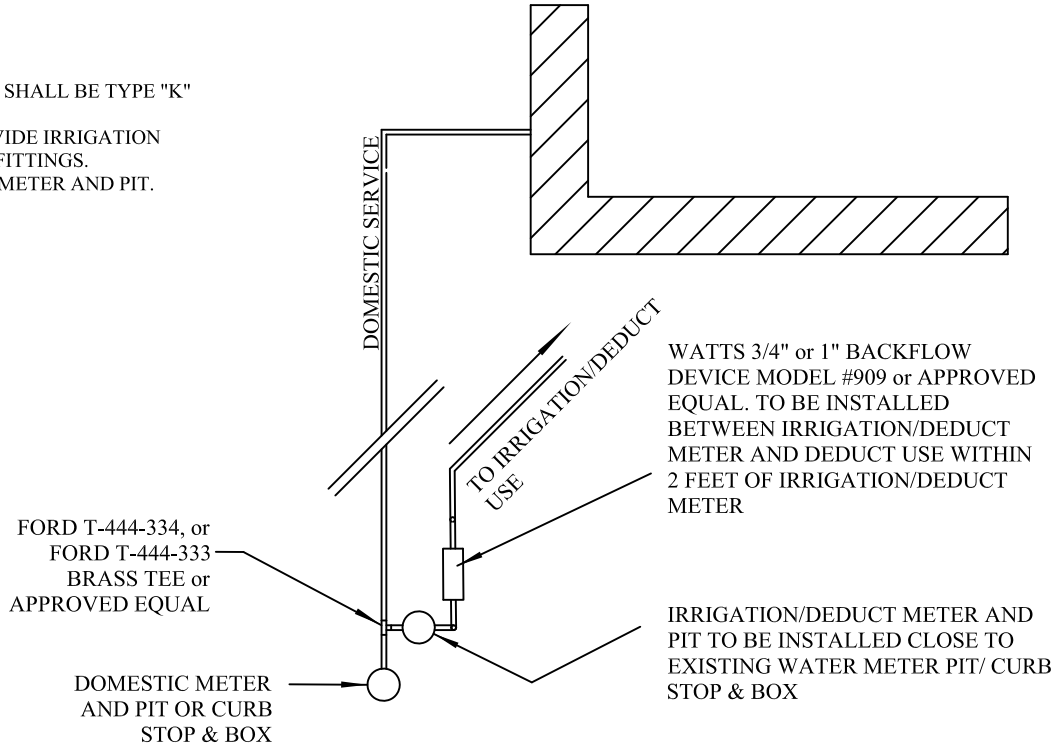

PLAN VIEW

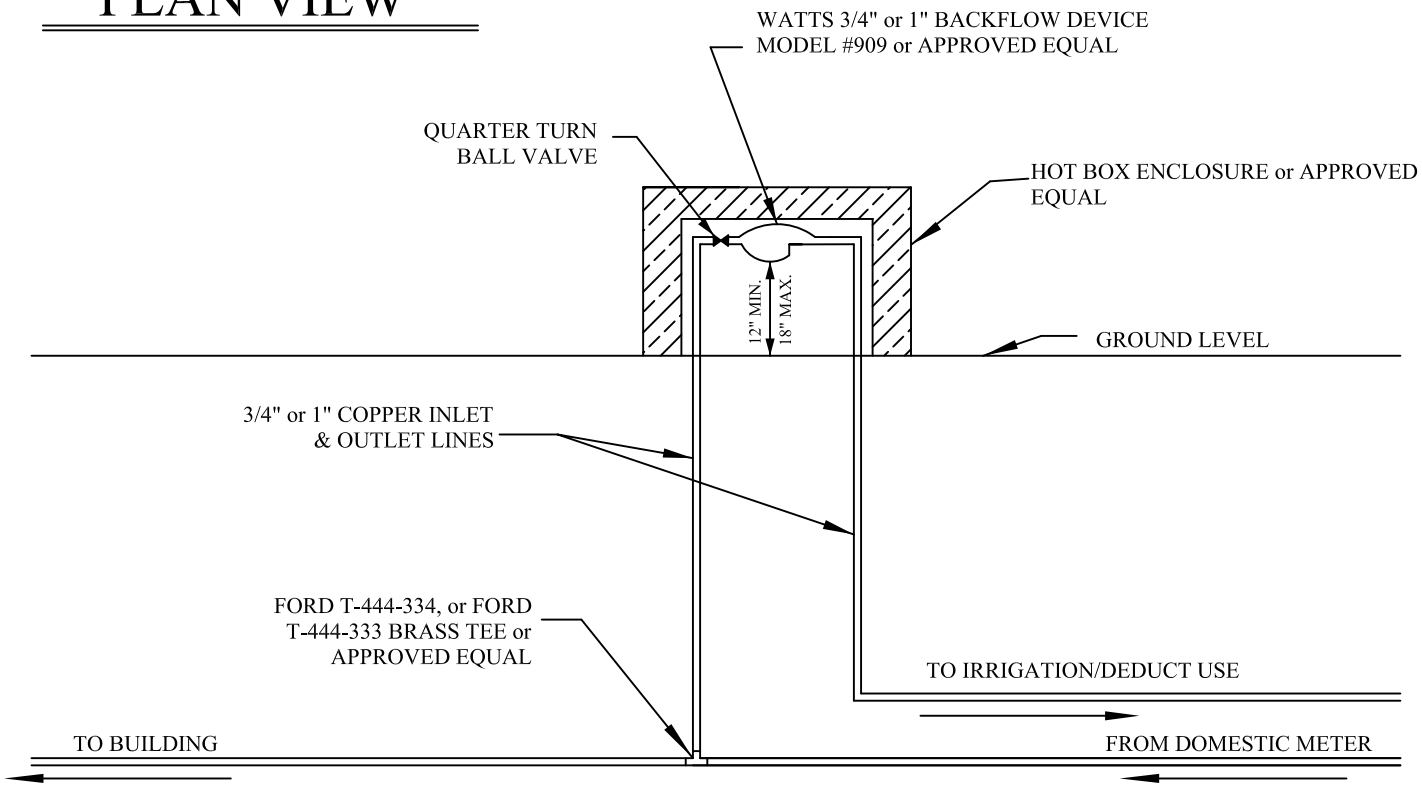

SECTION VIEW

NO WATER FROM AN IRRIGATION/DEDUCT METER SHALL BE ALLOWED TO ENTER THE SANITARY SEWER SYSTEM

OUTSIDE IRRIGATION/DEDUCT METER DETAILS

CITY OF LEBANON DEPARTMENT OF ENGINEERING

CITY OF LEBANON 1802

DATE 7/25/2006

APPROVED BY:

STANDARD DRAWING

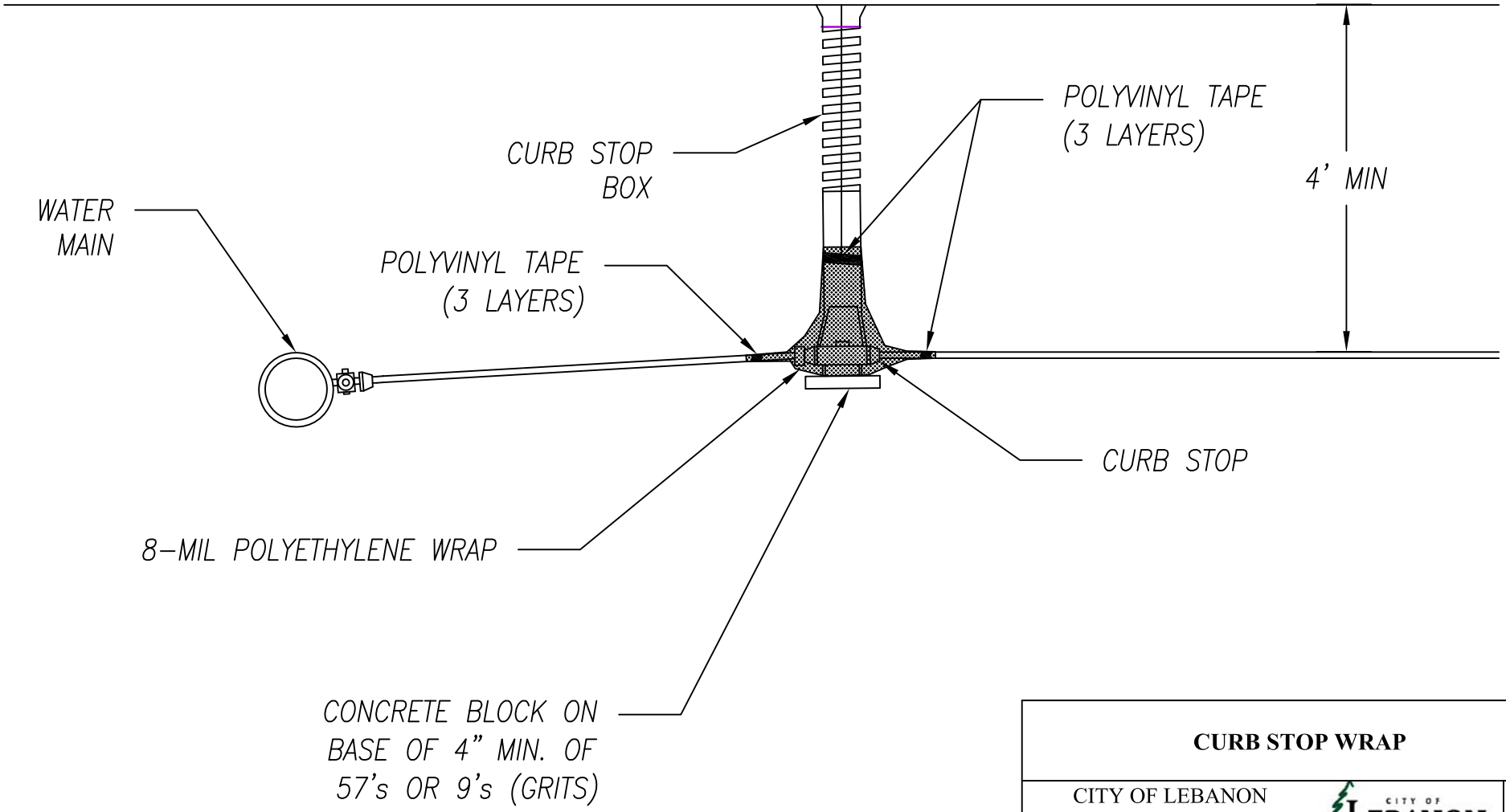

CURB STOP WRAP

CITY OF LEBANON
DEPARTMENT OF
ENGINEERING

CITY OF LEBANON 1802

DATE
2/6/2014

APPROVED
BY

STANDARD
DRAWING