OFFICE OF THE CITY ENGINEER
50 S. Broadway
Lebanon, OH 45036
Phone: 513-228-3130
Fax: 513-932-2493
dowens@lebanonohio.gov

To: City of Lebanon Development Community

Date: March 17, 2003
REVISED April 30, 2003
REVISED September 8, 2003
REVISED December 30, 2003
REVISED January 4, 2012
REVISED April 2, 2004
REVISED January 26, 2005
REVISED August 29, 2005
REVISED August 1, 2006

Re: As-Built Plan Requirements

The *Land Development Design & Construction Standards Manual* for the City of Lebanon, Ohio states the following:

> *"Provide a complete set of As-Built drawings to the City of Lebanon. As-Built drawings shall be provided on Mylar sheets (4-mil double matte finish, white) and as a digital file compatible with AutoCAD. As-Built drawings shall conform to the requirements found in the Appendix.*
>
> *Prepare and submit certified final as-built quantities signed and stamped by a Professional Engineer registered in the State of Ohio. The As-Built quantities shall conform to the requirements found in the Appendix."*

Effective immediately, prior to the release of public improvement bonds or the approval of comprehensive permits for newly completed subdivisions, as-built drawings shall be submitted in accordance with the following standards:

1. As-built plans shall utilize the NAD-83 Ohio South State Plane Coordinate System for horizontal control and the NAVD-1988 for vertical control.
2. As-built construction plans shall be conducted upon completion of all public improvements as shown on the approved construction plans and prior to acceptance by the City of Lebanon. As-built drawings shall contain the following:
    a. Sanitary sewer:
        i. Lengths, inverts, rim elevations, pipe material (labeled "as shown on approved construction plans"), and percent grades.
        ii. Locations (by station number & offset and state plane coordinates) of all sanitary sewer main appurtenances (manholes, clean-outs, etc.).
    b. Storm sewer:

i. Lengths, inverts, rim elevations, pipe material (labeled "as shown on approved construction plans"), and percent grades.

ii. Locations (by station number & offset and state plane coordinates) of all storm sewer appurtenances (catch basins, manholes, field grates, centerline information for paved ditches, headwalls, etc.).

c. Water:

i. Depth to the top of the water valve nuts for all water valves.

ii. Locations (by station number & offset and state plane coordinates) of all water main appurtenances (valves, fire hydrants, water meter pits, curb stops, etc.).

d. Miscellaneous utilities:

i. Locations (by station number & offset and state plane coordinates) of all electrical and telecommunications appurtenances if visible and/or installed (i.e., hand boxes, transformers, cross-overs (pick-up E stamped on curb), light poles, etc.).

e. Detention Basin:

i. Locations (by station number & offset and state plane coordinates) of all inlets and outlet structures, spillways, etc. Elevations shall be provided for all items. Orifice diameters shall be provided.

ii. Topography of the basin and downstream flow channels shall be shown. The design and as-built volumes of the basin shall be listed in cubic feet.

The as-designed information shall be shown in black, while the as-built information shall be shown in red with the as-designed information being struck out with a single line. The as-built location of improvements shall be graphically shown in both plan and profile views in red.

3. Under Section 1113.12(C) of the Subdivision Regulations for the City of Lebanon, Ohio, an Official Drainage Plan is required. The Official Drainage Plan shall be a final approved as-built grading plan of the subdivision. This plan is required to verify that the contour changes of the subdivision shown on the approved grading plan have been constructed in accordance with the plan. The as-built grading plan will need to be conducted prior to the construction of any homes within the subdivision. Any deviations from the grading as shown in the approved grading plans shall be shown in red with the original grading shown in black.

4. All subdivision boundary corners shall also be tied to the NAD-83 Ohio South State Plane Coordinate System and labeled with a northing and easting as well as centerline intersections, cul-de-sac center points and offsets and offsite easement centerlines where requested.

5. As-built plans shall be submitted on standard 22" x 34" or 24" x 36" 4-mil double matt finish, white Mylar sheets, include all sheets from title sheet to last sheet (i.e., if approved construction plans have 15 sheets, all 15 sheets shall be required for as-built plans) and be stamped by a professional engineer or surveyor registered in the State of Ohio.

6. Digital copies of all as-built plans shall also be submitted on CD in AutoCAD and PDF formats with both design and as-built information shown as described above. AutoCAD layouts shall be provided allowing for the reproduction of a complete set of plans as needed.
7. The City of Lebanon, in accordance with the Governmental Accounting Standards Board (GASB) Statement 34, is required to capitalize all infrastructure improvements. To ensure all contributed capital infrastructure from private development is accurately documented, all as-built plans shall be accompanied with an as-built quantity sheet. The quantities shall be provided in the format shown and submitted as a hard copy and digital copy (excel spreadsheet format). Unit prices consistent with the bond estimate prices shall be submitted with the as-built quantities.

Should you have any questions, please contact the Engineering Department at 513-228-3130.

SUBDIVISION NAME
SECTION # (PHASE #)
"AS-BUILT" CONTRIBUTED CAPITAL IMPROVEMENTS
YEAR

ITEM NO.	DESCRIPTION	QNTY	UNIT	UNIT COST	TOTAL COST
	ROADWAY				
609	Concrete Curb & Gutter	750	L.F.	$ 10.00	$ 7,500.00
608	Curb Ramps	16	EA.	$ 600.00	$ 9,600.00
630	Stop Signs	16	EA.	$ 250.00	$ 4,000.00
630	No Parking Signs	30	EA.	$ 100.00	$ 3,000.00
630	Speed Limit signs	18	EA.	$ 200.00	$ 3,600.00
630	Street Signs	8	EA.	$ 150.00	$ 1,200.00
	SUB-TOTAL				**$ 28,900.00**
	PAVEMENT				
301	Bituminous Aggregate Base	75	CY	$ 240.00	$ 18,000.00
304	Aggregate Base	35	CY	$ 35.00	$ 1,225.00
407	Tack Coat	20	GAL	$ 25.00	$ 500.00
448	Asphalt Concrete - Intermediate Course	15	CY	$ 75.00	$ 1,125.00
448	Asphalt Concrete - Surface Course	15	CY	$ 75.00	$ 1,125.00
	SUB-TOTAL				**$ 21,975.00**
	STORM SEWER SYSTEM				
601	Rip-Rap-Type B	10	C.Y.	$ 100.00	$ 1,000.00
602	Headwall Type 1 (12" Pipe)	2	EA.	$ 750.00	$ 1,500.00
602	Headwall Type 1 (30" Pipe)	3	EA.	$ 1,250.00	$ 3,750.00
602	48" Headwall w/Wingwalls	2	EA	$ 2,500.00	$ 5,000.00
603	12"Storm Sewer-Concrete	50	L.F.	$ 31.26	$ 1,563.00
603	12"Storm Sewer-ADS	500	L.F.	$ 25.48	$ 12,740.00
603	15"Storm Sewer-Concrete	30	L.F.	$ 34.94	$ 1,048.20
603	15"Storm Sewer-ADS	200	L.F.	$ 31.24	$ 6,248.00
603	18"Storm Sewer-Concrete	60	L.F.	$ 38.07	$ 2,284.20
603	18"Storm Sewer-ADS	168	L.F.	$ 34.22	$ 5,748.96
603	24"Storm Sewer-Concrete	39	L.F.	$ 47.64	$ 1,857.96
603	24"Storm Sewer-ADS	216	L.F.	$ 42.09	$ 9,091.44
603	30"Storm Sewer-Concrete	45	L.F.	$ 54.61	$ 2,457.45
603	30"Storm Sewer-ADS	97	L.F.	$ 48.76	$ 4,729.72
603	36" Storm Sewer	28	LF	$ 72.23	$ 2,022.44
603	48" Storm Sewer	78	LF	$ 112.74	$ 8,793.72
604	CB-3A Catch Basin	8	EA.	$ 3,265.48	$ 26,123.84
604	CB-3A Modified Catch Basin	3	EA.	$ 4,284.36	$ 12,853.08
604	CB-3 Catch Basin	7	EA.	$ 2,874.85	$ 20,123.95
604	CB-3 Modified Catch Basin	4	EA.	$ 5,412.00	$ 21,648.00
604	CB-2-2A Catch Basin	12	EA.	$ 2,541.87	$ 30,502.44
604	CB-2-2B Catch Basin	2	EA.	$ 1,248.23	$ 2,496.46
604	CB-2-4 Catch Basin	8	EA.	$ 4,056.78	$ 32,454.24
604	Storm Manhole	18	EA.	$ 2,756.48	$ 49,616.64
605	4" Perforated Pipe at Catch Basin	1500	L.F.	$ 7.23	$ 10,845.00
Special	4" Sump line	350	L.F.	$ 9.57	$ 3,349.50
Special	6" Sump line	400	L.F.	$ 12.02	$ 4,808.00
	SUB-TOTAL				**$ 284,656.24**
	SANITARY SEWER SYSTEM				
603	6" Sanitary Lateral - PVC SDR 35	1800	L.F.	$ 28.79	$ 51,822.00
603	8" Sanitary Main - PVC SDR 35	683	L.F.	$ 47.82	$ 32,661.06
603	8" Sanitary Main - Truss Pipe	257	L.F.	$ 63.48	$ 16,314.36
603	12" Sanitary Main - PVC SDR 35	492	L.F.	$ 121.77	$ 59,910.84
603	12" Sanitary Main - Truss Pipe	186	L.F.	$ 106.93	$ 19,888.98
603	15" Sanitary Main - PVC SDR 35	40	L.F.	$ 156.47	$ 6,258.80
603	15" Sanitary Main - Truss Pipe	78	L.F.	$ 212.74	$ 16,593.72
604	Sanitary Manhole	19	EA.	$ 4,612.13	$ 87,630.47
604	Sanitary Manhole with Drop Assembly	2	EA.	$ 5,247.56	$ 10,495.12
	SUB-TOTAL				**$ 301,575.35**
	WATER DISTRIBUTION SYSTEM				
638	8" Water Main, Class 53 DI incl. bends, tees, plugs, boxes, etc.	812	L.F.	$ 61.32	$ 49,791.84
638	12" Water Main, Class 53 DI incl. bends, tees, plugs, boxes, etc.	256	L.F.	$ 72.86	$ 18,652.16
638	8" RW Gate valve & box	22	EA	$ 1,057.28	$ 23,260.16
638	12" RW Gate valve & box	5	EA	$ 1,267.46	$ 6,337.30
638	6" Fire Hydrant, incl. valves, tees, etc.	12	EA.	$ 3,271.67	$ 39,260.04
638	6" Gate valve & box	1	EA	$ 945.82	$ 945.82
638	1" Water Services, Type K Copper	1800	LF.	$ 32.85	$ 59,130.00
638	1" Water Service Curb Stop and Box	72	EA.	$ 272.48	$ 19,618.56
	SUB-TOTAL				**$ 216,995.88**
	MISCELLANEOUS				
Special	Set Property Monumentation	80	EA.	$ 120.00	$ 9,600.00
	SUB-TOTAL				**$ 9,600.00**
	GRAND TOTAL				**$ 863,702.47**

SAMPLE

CITY OF LEBANON APPROVAL

City Engineer

I hereby certify that the above listed quantities and unit costs reflect an accurate detail of the items installed as indicated by the final invoice submitted by contractor

Date

Plan View Samples

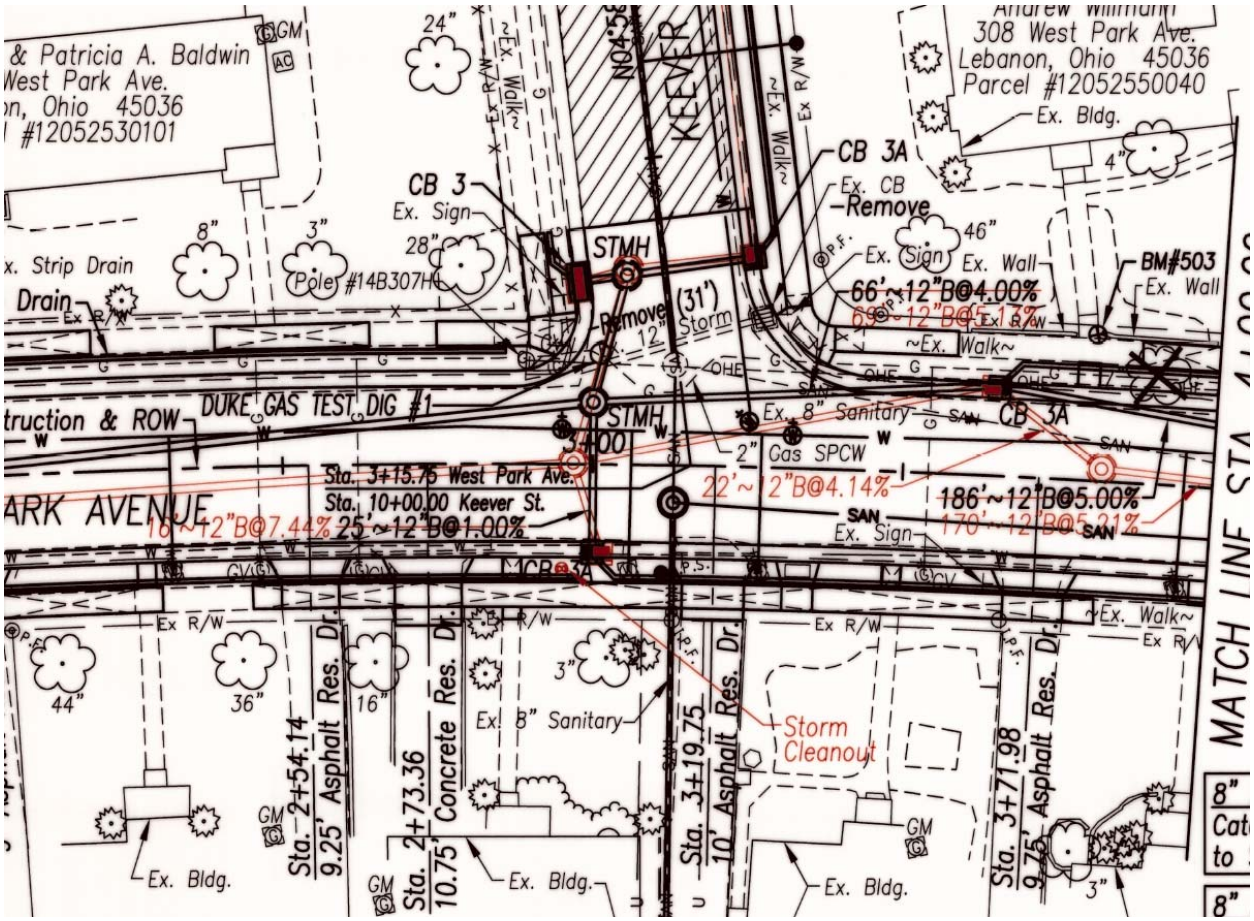

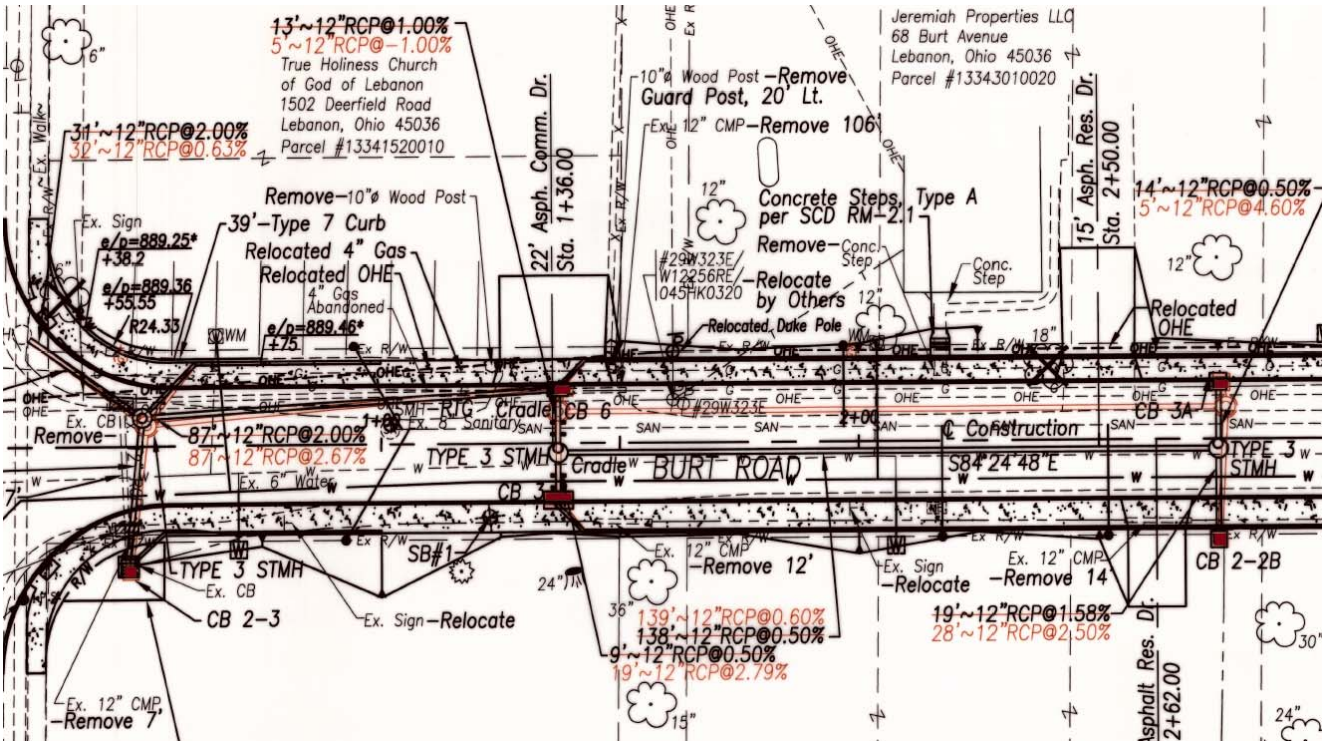

Sample Profile Views

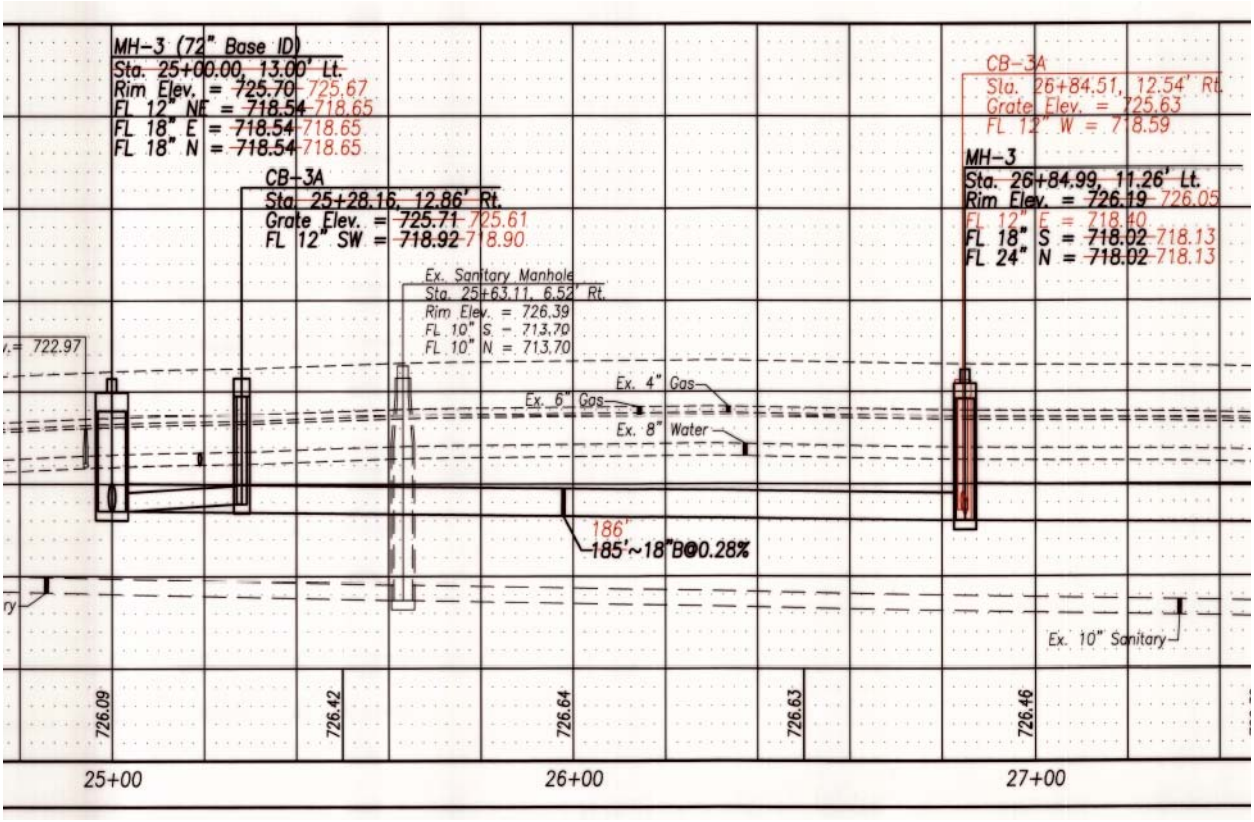

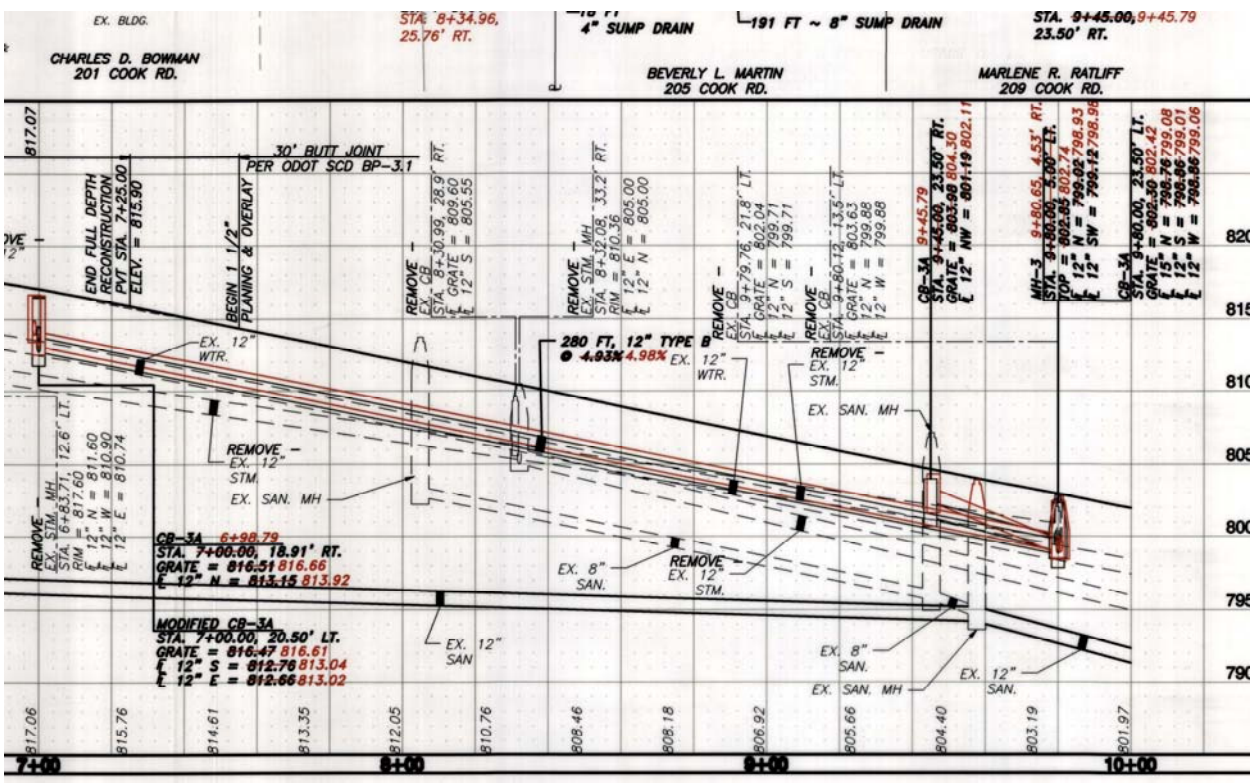

Sample Cross Sections

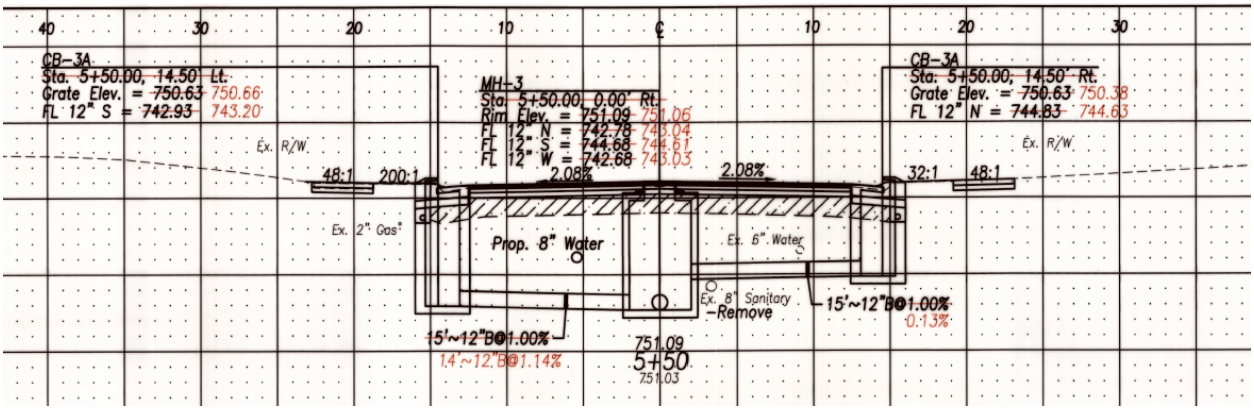

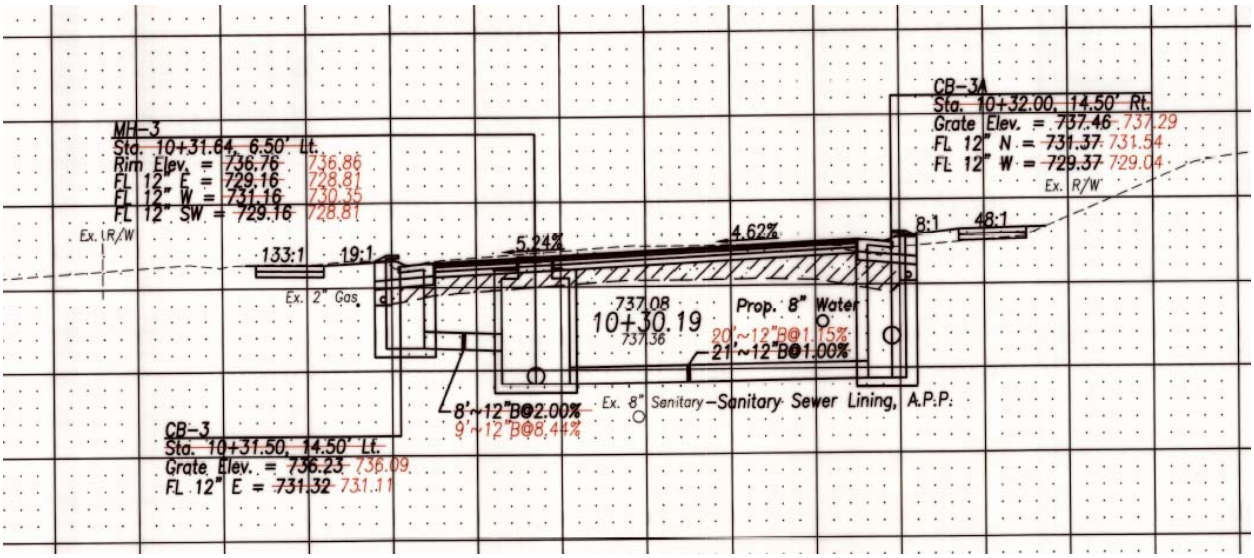

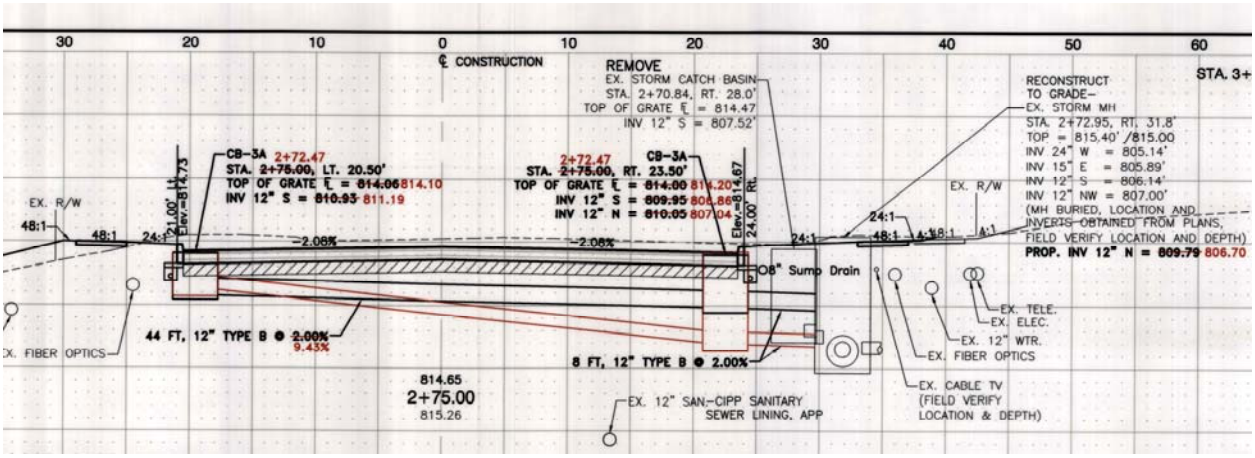

Sample Detention As-Builts

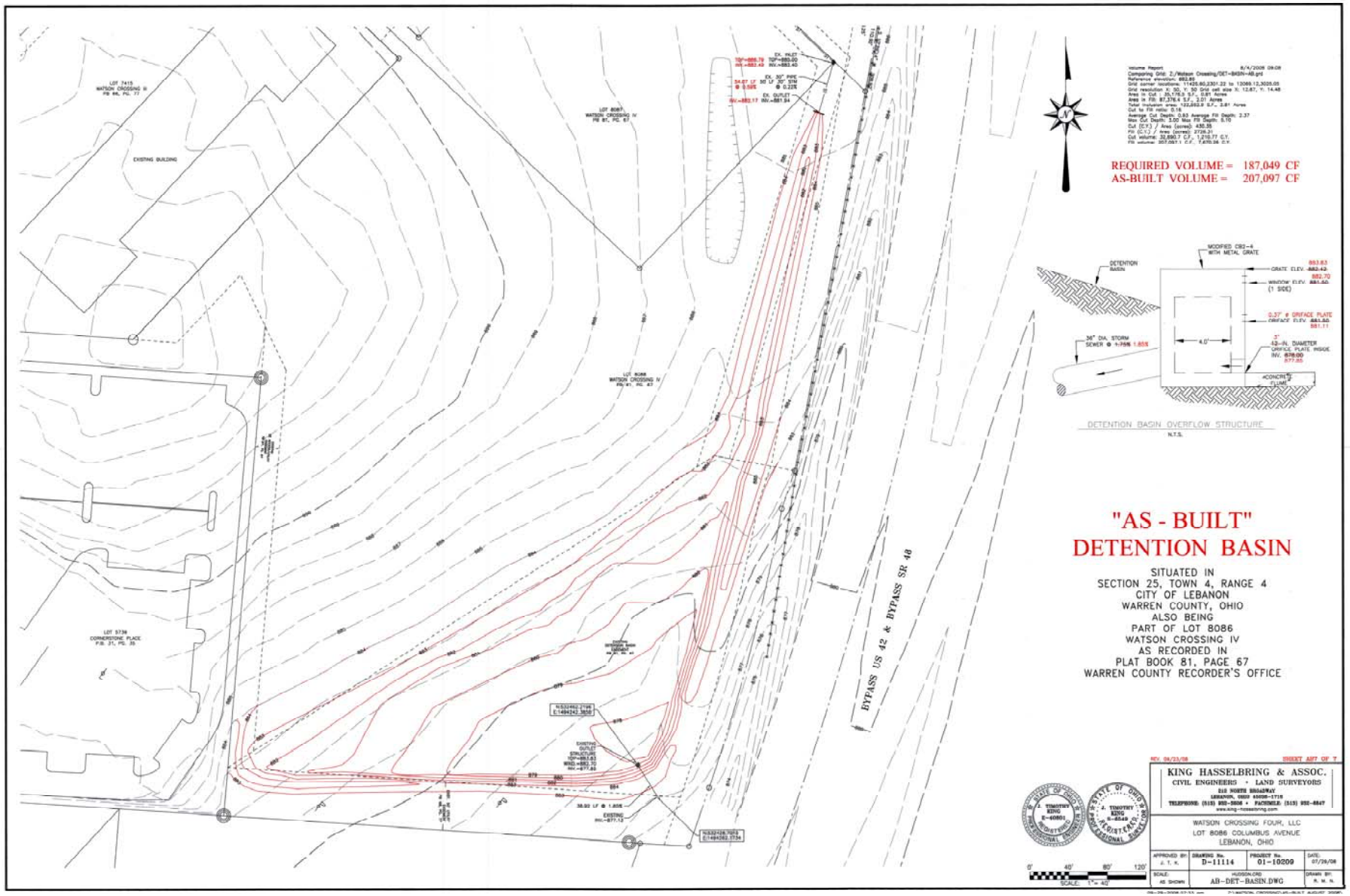

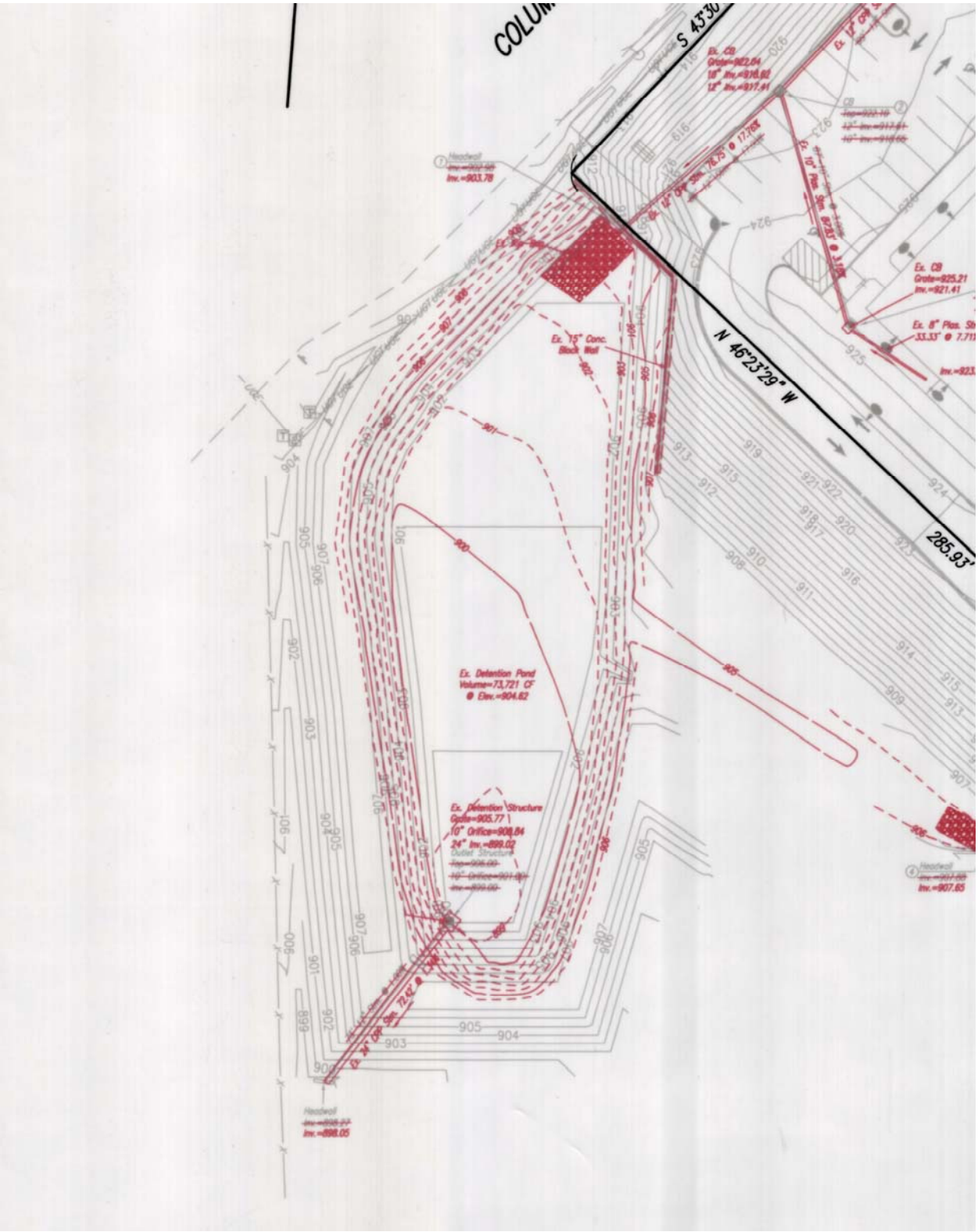
S 45°30
N 46°23'29" W
285.93'
Ex. CB
Grate=922.64
18" Inv.=916.92
12" Inv.=917.41
Headwall
Inv.=903.78
Ex. CB
Grate=925.21
Inv.=921.41
Ex. 15" Conc.
Block Wall
Ex. Detention Pond
Volume=73,721 CF
@ Elev.=904.62
Ex. Detention Structure
Grate=905.77
10" Orifice=900.84
24" Inv.=899.02
Headwall
Inv.=907.65
Headwall
Inv.=898.05